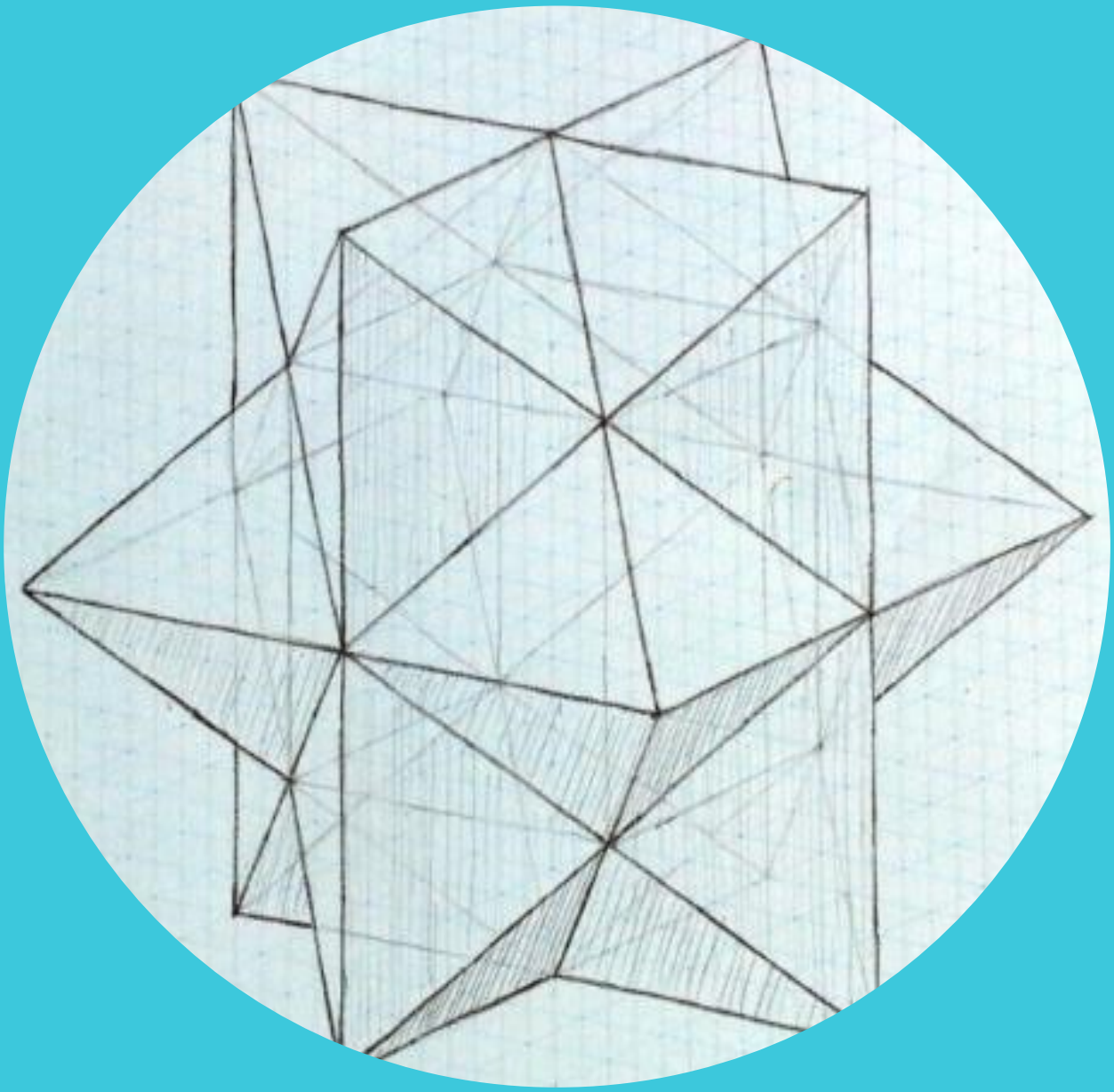

University Pathways
Year II

Pupil Name	
Handbook Designed by	Dr Hills

Timetable

Timetable – Tutorials

Tutorial	Date	Time	Location
1 (Baseline)			
2			
3			
4			
5			
6 (Final Assignment)			
7 (Feedback)			

Timetable – Homework Assignments

Homework Assignment	Description	Due Date
Tutorial 1		
Tutorial 2		
Tutorial 3		
Tutorial 4		
Tutorial 5		

Contents

Course Rationale pg. 5

Glossary of Keywords pg. 6

Knowledge Organisers pg. 7

Tutorial 2 pg. 9

- Objective A pg. 9
- Objective B pg. 11

Tutorial 3 pg. 13

- Objective A pg. 13
- Objective B pg. 16

Tutorial 4 pg. 18

- Objective A pg. 18
- Objective B pg. 21
- Objective C pg. 23

Tutorial 5 pg. 24

- Objective A pg. 24
- Objective B pg. 27

Tutorial 6 Pg. 29

- Exam and Revision Technique
- Reflection on feedback pg. 31

Appendices pg. 32

- Referencing correctly pg. 32

University Pathways Year II
Course Rationale

We aim to help you improve your knowledge and understanding of mathematics by examining one particular area of the curriculum.

We will investigate Pythagoras' Theorem in both two and three dimensions. Your algebra skills will be developed when we prove Pythagoras' Theorem and generalise it to a particular three-dimensional case.

By the end of the course, you will make connections with other aspects of the curriculum and you will have a greater appreciation of mathematics!

We hope this will help you to achieve a better grade in the GCSE examinations at the end of the year.

The tutorials will start by reviewing Pythagoras' Theorem and associated algebraic Manipulations. We will move forward to generalise Pythagoras' Theorem for some 3D-shapes and apply all knowledge to contextual questions.

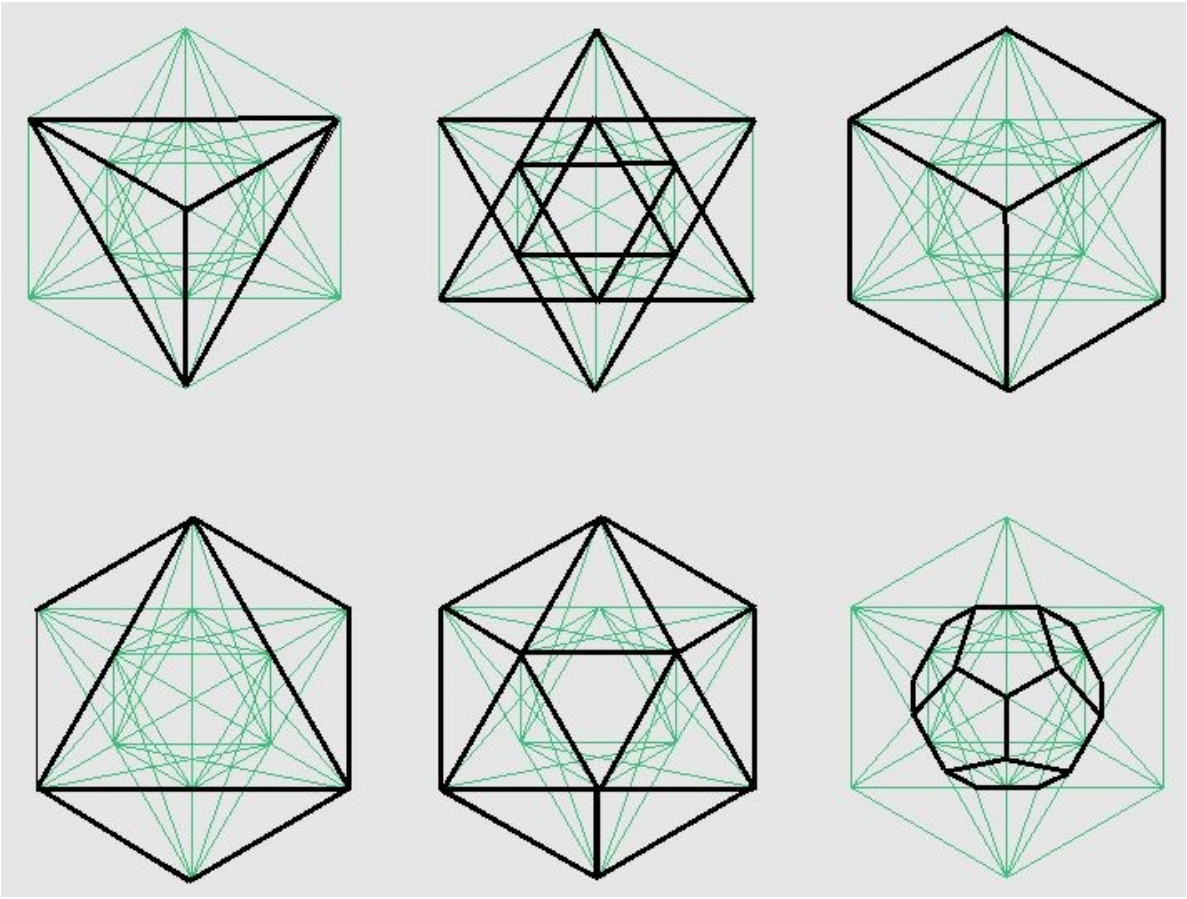

Subject Vocabulary

Word	Definition	In a sentence
Equilateral Triangle		
Isosceles Triangle		
Scalene Triangle		
Right Angled Triangle		
Hypotenuse		
Opposite		
Adjacent		
Square Root		
Surd		
2D (Two Dimensional)		
3D (Three Dimensional)		

Knowledge organiser: Pythagoras and trigonometry (F/H)

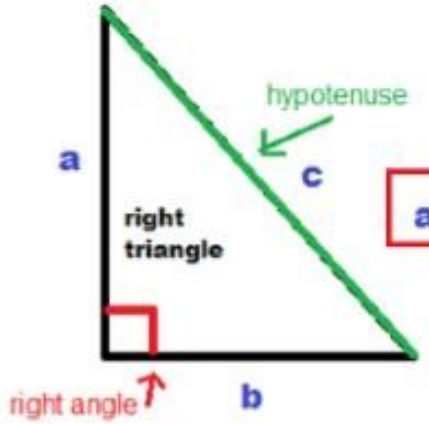

$$a^2 + b^2 = c^2$$

Finding a side when you have two other sides in a right angled triangle.

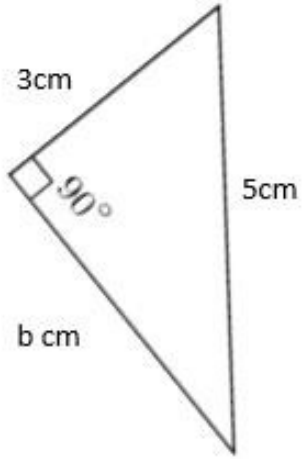

$$a^2 + b^2 = c^2$$
$$3^2 + b^2 = 5^2$$
$$9 + b^2 = 25$$
$$b^2 = 25 - 9$$
$$b^2 = 16$$
$$b = \sqrt{16}$$
$$b = 4cm$$

-9 -9

Finding an unknown angle or side in a right angled triangle.

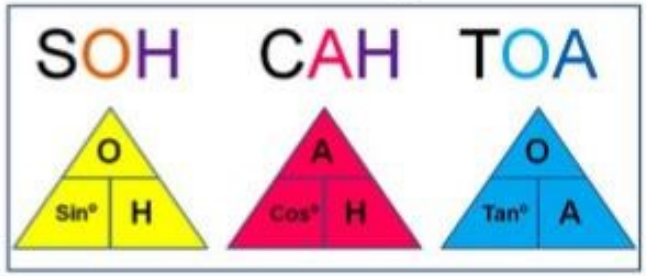

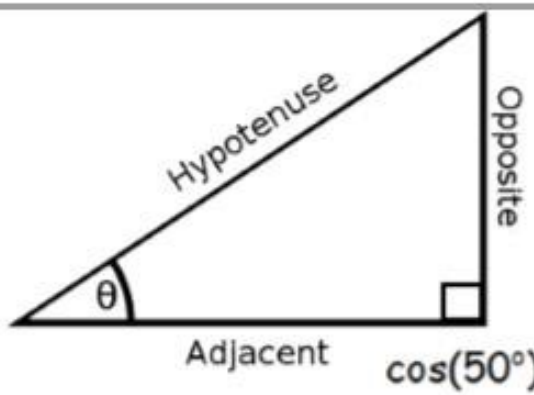

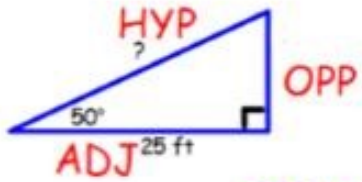

SOHCAHTOA

Hypotenuse: Longest side—opposite the right angle.

Opposite: Opposite the angle given or that you are wanting to find.

Adjacent: Next to the angle given or that you are wanting to find.

$$\cos(50°) = \frac{ADJ}{HYP}$$

$$\cos(50°) = \frac{25}{x}$$

Trick: Switch your x around!

$$x = \frac{25}{\cos(50°)} = \frac{25}{.6428} = 38.89$$

Trigonometric ratios you need to know.

	0°	30°	45°	60°	90°
sin θ	0	$\frac{1}{2}$	$\frac{\sqrt{2}}{2}$	$\frac{\sqrt{3}}{2}$	1
cos θ	1	$\frac{\sqrt{3}}{2}$	$\frac{\sqrt{2}}{2}$	$\frac{1}{2}$	0
tan θ	0	$\frac{\sqrt{3}}{3}$	1	$\sqrt{3}$	$\pm\infty$

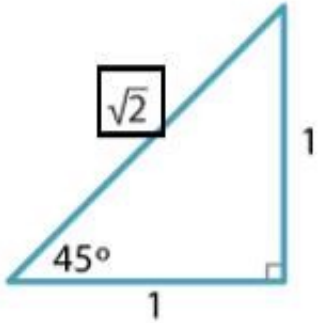

Isosceles triangle

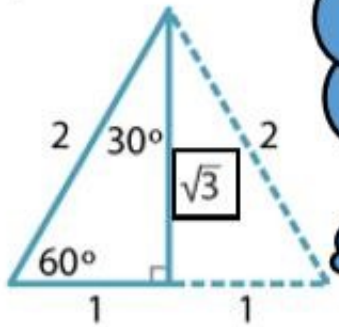

Equilateral triangle

These triangles might help you remember. Use Pythagoras to finding the sides in the box.

Finding angles and sides in non right angled triangles (H)

Sine Rule

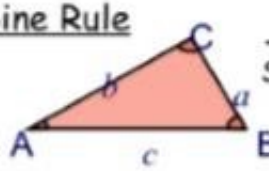

$$\frac{a}{\sin A} = \frac{b}{\sin B} = \frac{c}{\sin C}$$

(1)

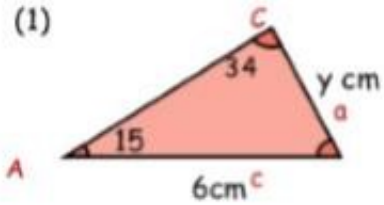

$$\frac{y}{\sin 15} = \frac{6}{\sin 34}$$

$$y = \frac{6}{\sin 34} \times \sin 15$$

$$y = 2.8 \text{ cm (1dp)}$$

Cosine rule

Find θ

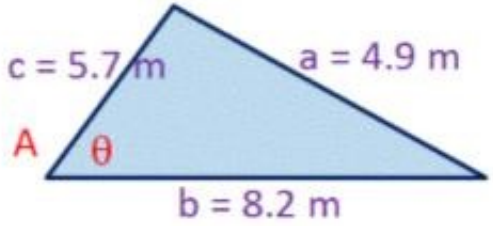

$$a^2 = b^2 + c^2 - 2bc\cos A$$

$$4.9^2 = 8.2^2 + 5.7^2 - 2(8.2)(5.7)\cos(\theta)$$

$$24.01 = 99.73 - 93.48\cos(\theta)$$

$$\cos(\theta) = \frac{99.73 - 24.01}{93.48}$$

$$\cos(\theta) = 0.8100$$

$$\theta = 35.9°$$

$a^2 = b^2 + c^2 - 2bc\cos A$	$\cos A = \frac{b^2 + c^2 - a^2}{2bc}$
$b^2 = a^2 + c^2 - 2ac\cos B$	$\cos B = \frac{a^2 + c^2 - b^2}{2ac}$
$c^2 = a^2 + b^2 - 2ab\cos C$	$\cos C = \frac{a^2 + b^2 - c}{2ab}$

Tutorial 2: Revisiting the Pythagorean Theorem

The purposes of this tutorial are:

A. To identify the hypotenuse and calculate its length,

B. To prove Pythagoras' Theorem.

Starter:
Name the types of triangle listed below.
What properties do they possess? How do you know this?

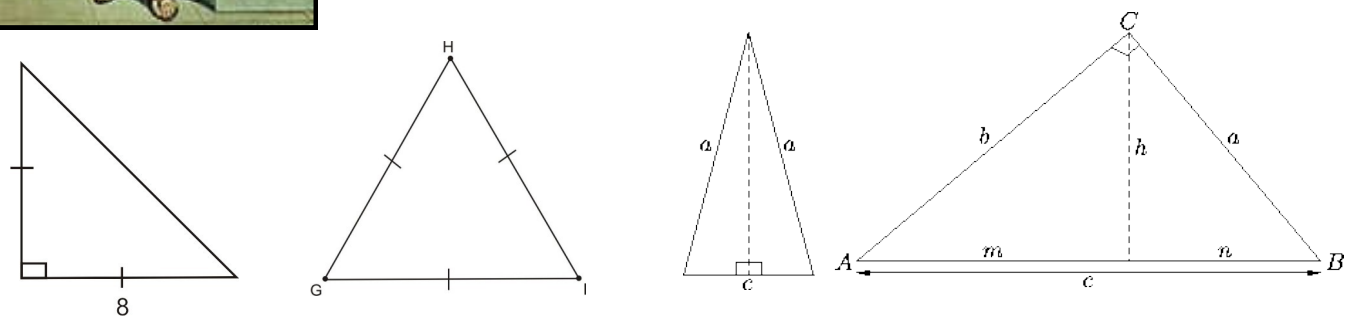

Objective A: Identify the hypotenuse and calculate its length using Pythagoras' Theorem

<u>Definition</u>: *Hypotenuse*

The longest side of a right angled triangle. It is always found opposite the right angle.

<u>Theorem</u> : *Pythagoras' Theorem (The Pythagorean Theorem)*

Pythagoras' theorem states that for any right angled triangle (see diagram below) the following equation is always satisfied:

$$a^2 + b^2 = c^2$$

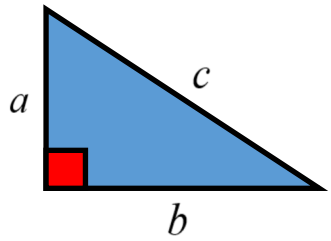

Worked Example:

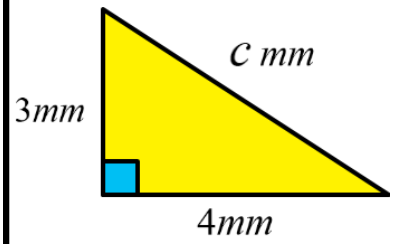

To find the missing length, *c,* we must check which side it is. It is opposite the right angle, therefore, it is the ***HYPOTENUSE***. Now, we can substitute the values into the theorem to find the length *c*. ***<u>REMEMBER TO:</u>*** *<u>Take the square root!</u>*

$$c^2 = 3^2 + 4^2 = 9 + 16 = 25,$$
$$c = \sqrt{25} = 5mm$$

Practice A: Identify the hypotenuse and calculate its length using Pythagoras' Theorem

1) Identify the hypotenuse in the following triangles:

i)

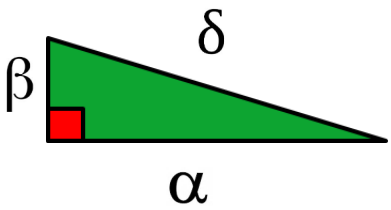

ii)

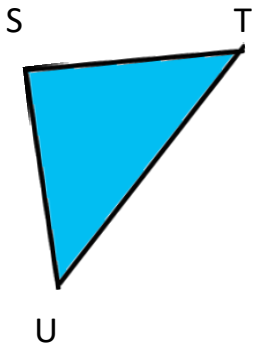

iii)

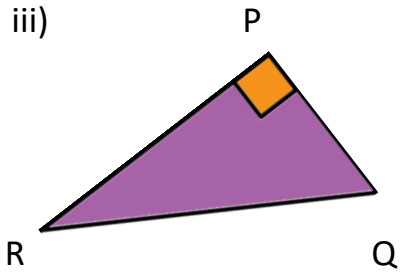

2) For each triangle above state Pythagoras' Theorem (take care with notation).

3) Calculate the length of the hypotenuse for the right angle triangle below.

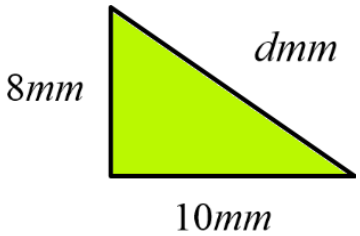

i) Round your answer to 2 decimal places

ii) Express your answer as a surd.

4) Write a sentence (or several) to explain Pythagoras' Theorem

5) Calculate the hypotenuse of the triangles below (give your answers to an appropriate degree of accuracy).

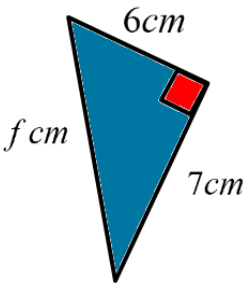

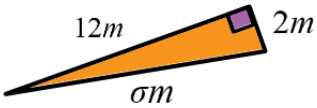

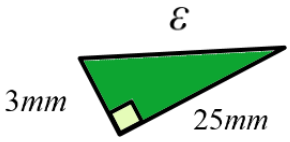

6) Bob calculated the length of the hypotenuse. Do you agree with his calculation? State your reasons.

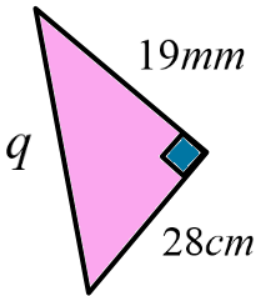

$$q = 28^2 + 1.9^2$$

$$q = 784 + 3.61$$

$$q = 787.61cm$$

Assessment A: Identify the hypotenuse and calculate its length using Pythagoras' Theorem

Provide an explanation of your reasoning and calculation for each question.

1)

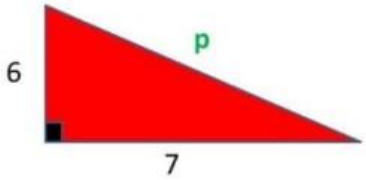

Which of the following would correctly calculate the missing side's length?

A $p = 7 + 6$

B $p = 7^2 + 6^2$

C $p = \sqrt{7^2 - 6^2}$

D $p = \sqrt{7^2 + 6^2}$

2a) For the triangle below, which statement/s are true?

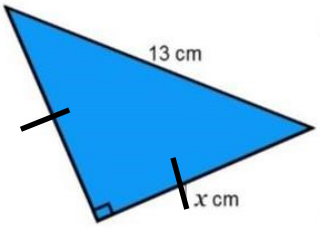

A $2x^2 = 169$

B $2x = 169$

C $x = \sqrt{169}$

D $2x = 26$

b) What misconceptions does each incorrect statement highlight?

Objective B: To prove Pythagoras' Theorem.

Pythagoras' Theorem is one of the most important theorems of Euclidean Geometry.

But, why is it always true for any right angled triangle? Where does it come from?

And, you might think that proving a mathematical theorems is too hard.

However, we can think of it in terms of area.

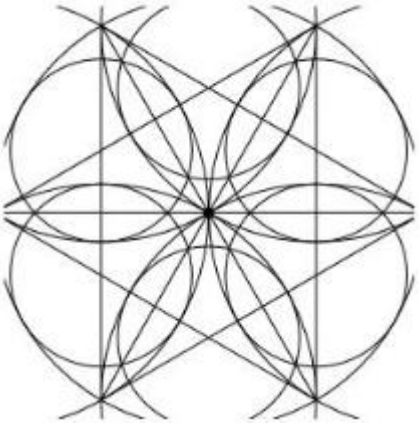

Practice B: Proving Pythagoras' Theorem

1) Calculate the area of the square and triangle.

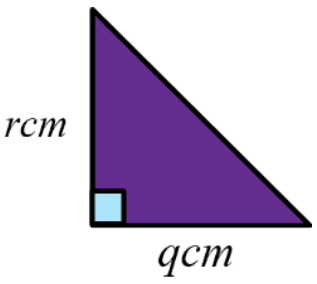

Practice B: Proving Pythagoras' Theorem

2) The area of the square is equal to the area of two triangles. Use your previous answers to form an algebraic equation. What can you deduce from it?

3)

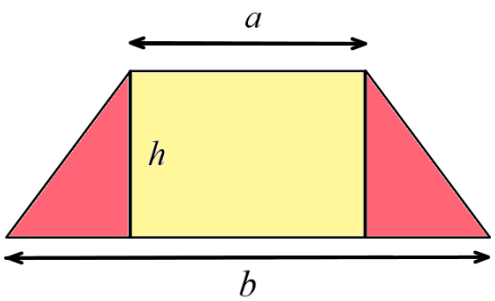

i) What is the base length of the pink triangle?

ii) Use your previous answer to calculate the total area of the whole shape.

Assessment B: To prove Pythagoras' Theorem.

Use the diagram below to answer the questions.

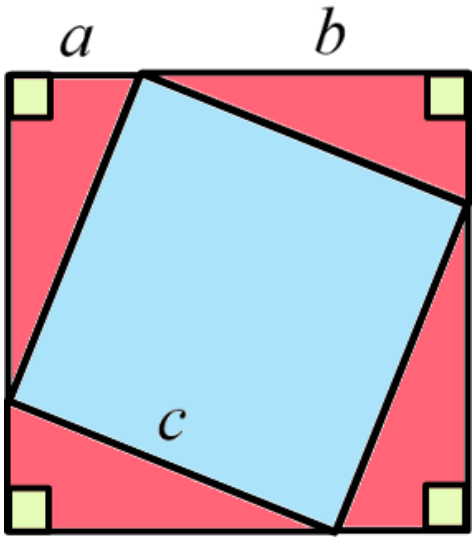

1) Calculate the area of the large square.

2) Calculate the area of one triangle and the small square.

3) Form an algebraic equation that describes the relation between the areas.

4) Simplify the equation. What is the final result?

Tutorial 3: Manipulating the Pythagorean Theorem

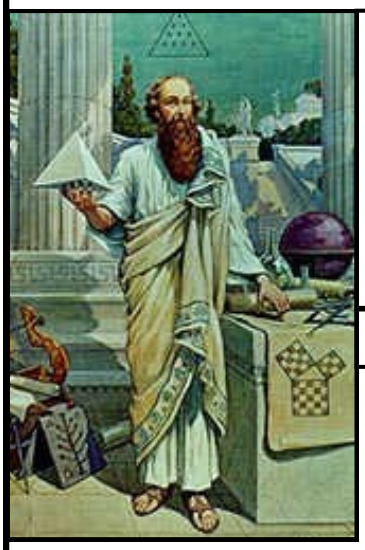

The purposes of this tutorial are:

A. To calculate other side lengths of right-angled triangles using Pythagoras' Theorem.

B. Apply all knowledge to solve worded (contextual) questions.

Starter:

1) Calculate the length of the hypotenuse:

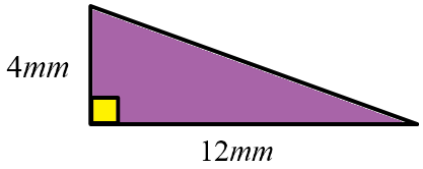

2) Rearrange the following equations to make b the subject of the formula:

a) $2b + a = t$ b) $2p - 3b = 6$ c) $b^2 - k^2 - 3(2k + 3) = 0$

Objective A: Manipulate Pythagoras' Theorem to calculate any side length

Worked example 1:

Calculate the length of side p

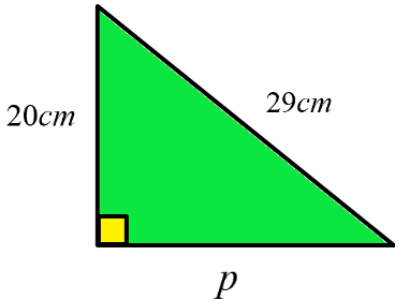

STUDY TIP
Use the information you have and substitute it into Pythagoras' Theorem.

$$20^2 + p^2 = 29^2$$ ← Substitute known info

Rearrange for p^2 and evaluate

$$p^2 = 29^2 - 20^2 = 841 - 400$$ ← Rearrange and Evaluate

$$p^2 = 441$$

Finally take the square root (we only need the positive root here, why?).

$$p = 21cm$$ ← Don't forget the units!

Worked example 2:

Calculate the length of side r

STUDY TIP
Think carefully about rounding.
Could it alter your answer?

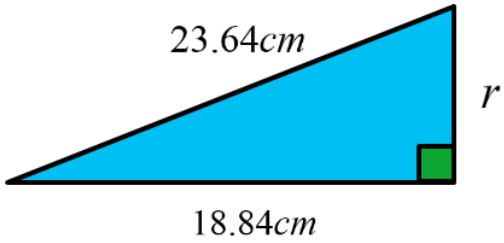

$$(18.84)^2 + r^2 = (23.64)^2$$

Substitute known info

Rearrange for r^2 and evaluate

$$r^2 = (23.64)^2 - (18.84)^2 = 558.8496 - 354.9456$$

Rearrange and Evaluate

$$r^2 = 203.904$$

Take the square root

$$r = 14.2794 \ldots cm$$

Don't forget the units!

And, round your answer to the same degree of accuracy as the question

$$r = 14.28cm$$

Practice A: Calculating other side lengths by manipulating Pythagoras' Theorem

1) i) Calculate the length of α (Greek letter alpha) when β = 8cm and δ = 16cm.

ii) Calculate the length of β (Greek letter beta) when α = 93mm and δ = 12.1cm

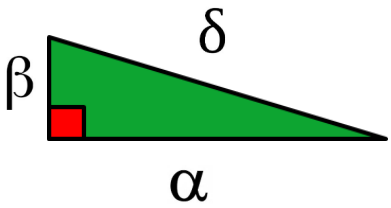

2) The triangle's longest side is 15.2m long. Its shortest side is 4.6cm long.

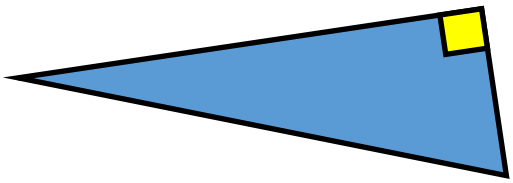

Calculate the remaining side's length.

3) i) A right angled triangle has a hypotenuse, μ, of length 9.5cm. Another side ω has length 3.4cm. Use suitable notation to draw a diagram illustrating this information.

ii) Calculate the remaining side length.

Practice A: Calculating other side lengths by manipulating Pythagoras' Theorem

4) i) A right angled traingle, ABC, has hypotenuse AB of length 14.18mm. The square of side BC is $169mm^2$. Draw a diagram that represents this information.

ii) Calculate the remaining side length.

5) Consider a triangle KLM. Its longest side is KM.
The square of a triangle's longest side length is $1681m^2$.
Is KLM a right angled triangle?

Assessment A: Calculating other side lengths by manipulating Pythagoras' Theorem

1) The diagonal of a square is 6cm.
What is the perimeter of the square?

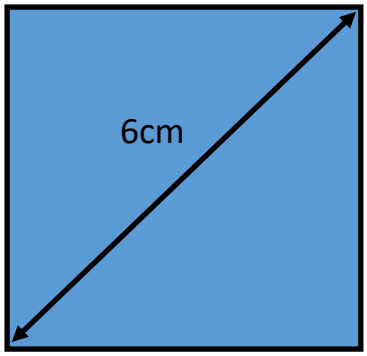

A $12\sqrt{2}$ cm **B** 12cm

C $2\sqrt{18}$ cm **D** 24cm

2) An isosceles triangle has two sides of length 7cm and a base of length 10cm.

i) Draw a diagram with appropriate notation.

ii) Calculate the perpendicular height of the triangle.

3) Find the length of PQ

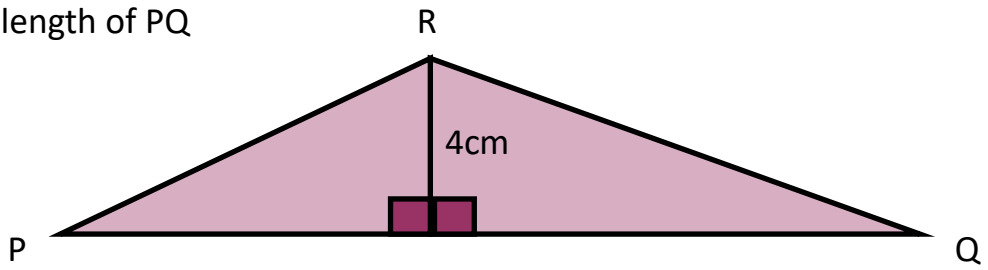

When PR = 9cm and RQ = 14cm.

A 26.8cm **B** 16.2cm **C** 21.5cm **D** 24.4cm

Objective B: Apply all knowledge to solve worded (contextual) problems

Worked example 1:
A ladder, 12m long, leans against a wall. The ladder reaches 10m up the wall. How far away from the foot of the wall is the foot of the ladder?

STEP 1:

***<u>Read the question carefully and construct a diagram</u>*.**

i) When the ladder leans against the wall it will form the hypotenuse - 12m.
ii) The other piece of information concerns the vertical side -10m.
iii) Label the unknown side and the rest of your diagram including the right angle.

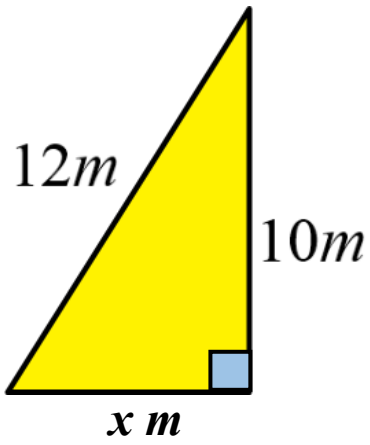

STEP 2:

<u>Apply Pythagoras' Theorem</u>

i) $x^2 + 10^2 = 12^2$ ← Rearrange and Evaluate

ii) $x^2 = 12^2 - 10^2 = 144 - 100$

$x^2 = 44$

$x = 6.63m$ ← Take the square root and round appropriately. Don't forget the units!

STEP 3:

<u>Interpret your answer and answer the question</u>

i) Write a sentence that answers the question.

"Therefore, the foot of the ladder is 6.63m away from the wall".

Practice B: Apply all knowledge to solve contextual problems

1) A model football pitch is 2m long and 0.5m wide. How far would a model player have to run across this pitch?
2) In a hockey game, after a pass was made, the ball travelled 7m up the field and 6m across the field. How long was the actual pass?
3) A ship is going from a port to a lighthouse. It steams 15km east and 12km north. How far is the lighthouse from the port?
4) A hunter fires an arrow to a bird. The bird falls 20m and the hunter has to walk 40m to pick it up. How far did the arrow travel?

Practice B: Apply all knowledge to solve worded (contextual) problems

5) A mast on a sailboat is strengthened by a wire (called a stay). The mast is 35 ft (feet) tall and the stay is 37 ft long. How far from the base of the mast is the stay?
6) Two large trees, 5.5m and 6.8m tall, stand 12m apart. A bird flies directly from the top of one tree to the top of the other. How far has the bird flown?
7) Triangle 1 has lengths 3cm, 4cm and tcm. Triangle 2 has lengths 13cm, 12cm and pcm. Both are right angled triangles. Will these triangles fit together exactly along the unknown edge?

Assessment B: Apply all knowledge to solve worded (contextual) problems

1) Doris is answering the question below.

A helicopter hovers 120m above the ground. A passenger is waiting, 135m away from the helipad. If the passenger could fly, how far would they have to travel.

She draws a diagram to illustrate the information.
Has Doris made any mistakes?
If so, correct them and complete the question.

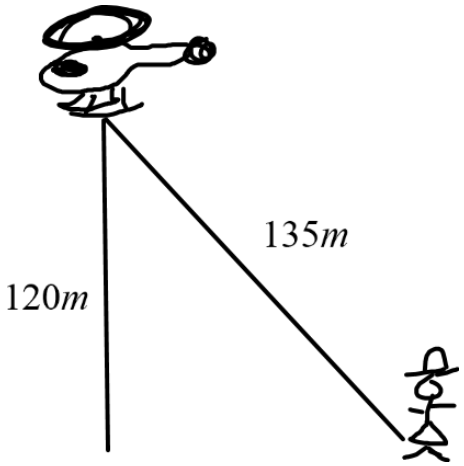

2) A new film contains a scene that involves a tight rope walk between two large buildings. The buildings are 600m and 900m tall, and stand 155m apart.

Billy has been asked by the director to calculate how long the rope is.

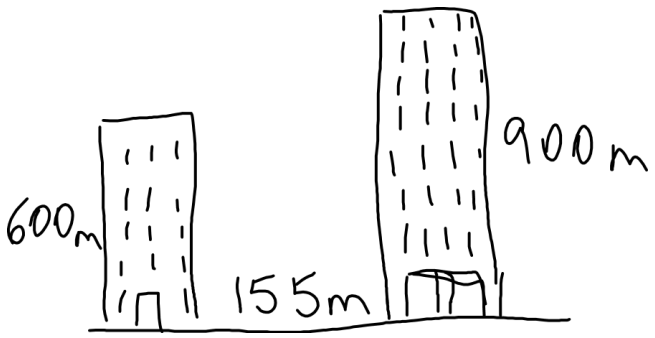

His diagram and working out are shown below. Do you agree? Highlight any problems and correct Billy's diagram and calculation.

$155^2 + 900^2$
$= 24025 + 81000$
$= 105025$

$\sqrt{105025} = 324.075\ldots$
$= 324.1\text{m}$

Tight rope
324.1m

Tutorial 4: Generalising *the Pythagorean Theorem*

The purposes of this tutorial are:

A. To identify and label right angled triangles in 3D-shapes

B. Calculate the length of diagonals in Cubes and Cuboids

And finally, Generalise Pythagoras' Theorem for Cubes and Cuboids in the plenary.

Starter:

1) A plane flies due north from London for 120km, before turning due west and flying 85km. It lands at a secret location. How far from London is the secret location.

2) A square has side lengths that are 15mm. How long is its diagonal?

Objective A: To identify and label right angled triangles in 3D-shapes

Worked example 1:

To calculate the length of the cuboid's diagonal, AH, we must Identify several triangles.

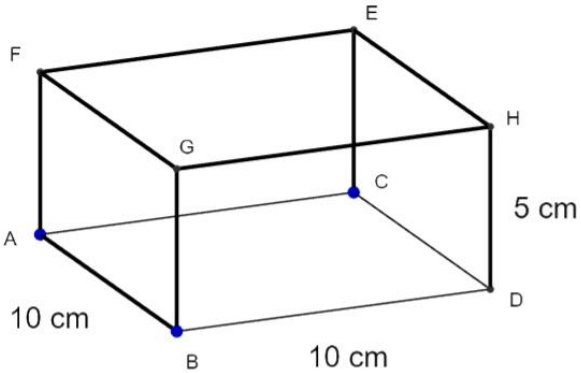

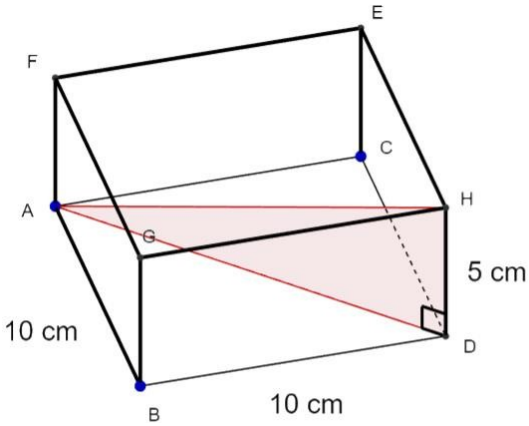

You can see the diagonal AH clearly.
But, we do not know the length of AD.

The second triangle (blue) is highlighted

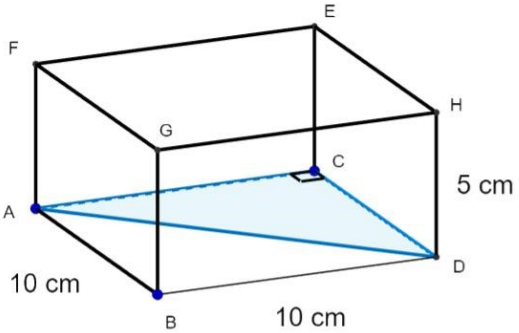

Objective A: To identify and label right angled triangles in 3D-shapes

Worked example 1 continued:

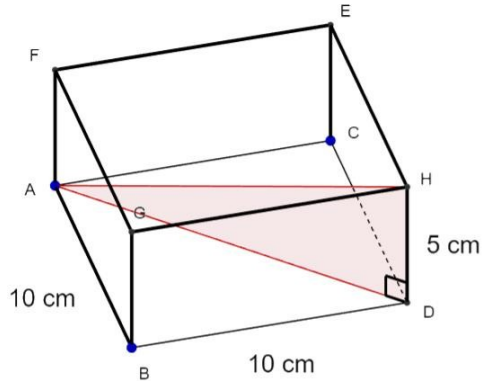

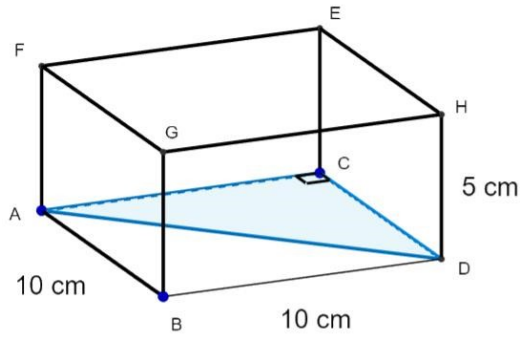

Finally, draw each triangle separately, to keep track of the side lengths and complete the calculation.

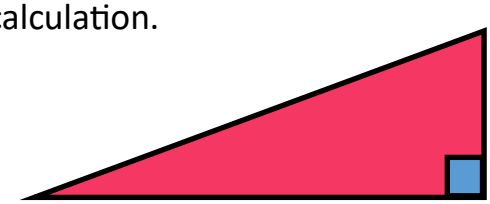

5cm

A D

10cm

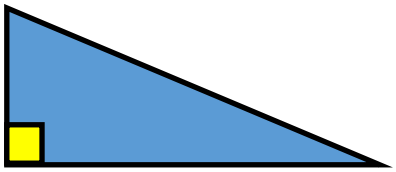

10cm

Practice A: To identify and label right angled triangles in 3D-shapes

1) Identify all right angled triangles necessary to calculate the length of the diagonal, CG

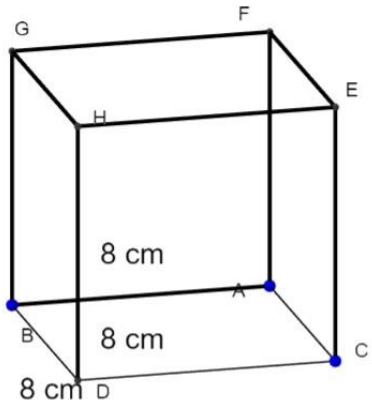

2) Identify all right angled triangles necessary to calculate the length of the diagonal, FD

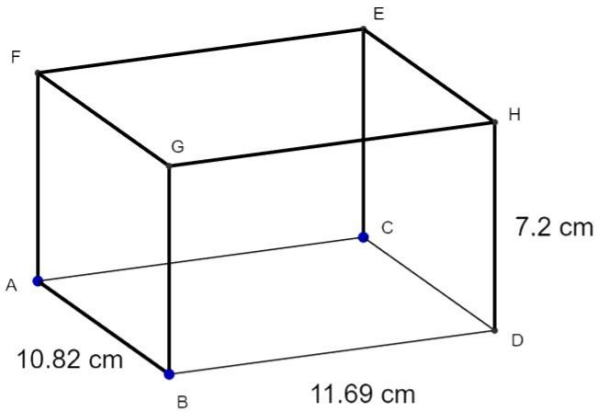

Practice A: To identify and label right angled triangles in 3D-shapes

3) A cube has volume 216cm^3. Calculate the side length and sketch the triangles that will help you to calculate the length of the diagonal.

4) A cuboid has surface area $10x^2$ cm^2. It also has two square faces of dimension x cm. Calculate the dimension of the rectangular side, then identify and label right angled triangles that will enable you to calculate the length of the diagonal.

5) A cube is filled with water such that half its volume is occupied by water. The cube's volume is 125cm^3. Draw right angled triangles to help you calculate the length of the diagonal from the cube's corner to the water level.

Assessment A: To identify and label right angled triangles in 3D-shapes

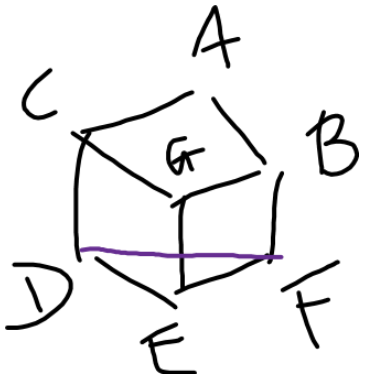

Doris was asked to draw and label a cube.

She was also asked to draw the cube's diagonal in purple.

Do you think Doris is correct?
What do you agree/disagree with?

Terry was asked to sketch and label a cuboid.
He then added the cuboid's diagonal in red.

Are there any issues with Terry's diagram?

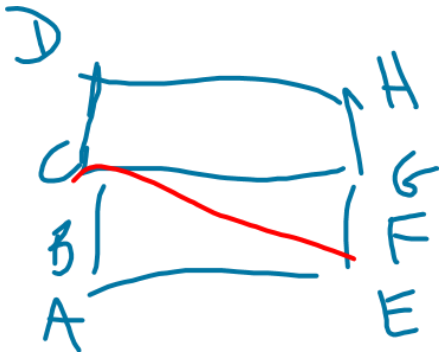

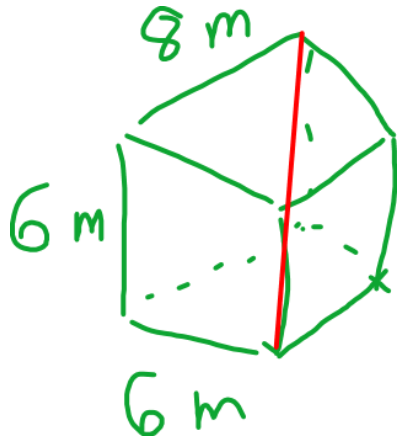

Mavis thinks that the triangles below will help her to calculate the length of the diagonal.

Do you agree? Could you correct/improve her diagrams?

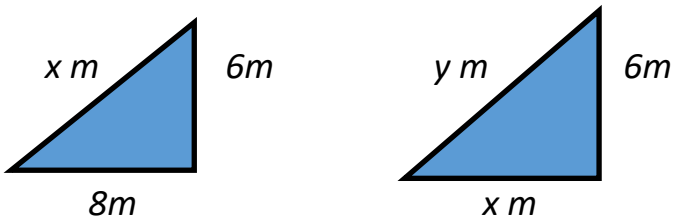

Objective B: To calculate the length of diagonals in cubes and cuboids

Worked example 1:

We now know how to identify right-angled triangles in cubes and cuboids. Let's use them to calculate the length of the diagonal AH.

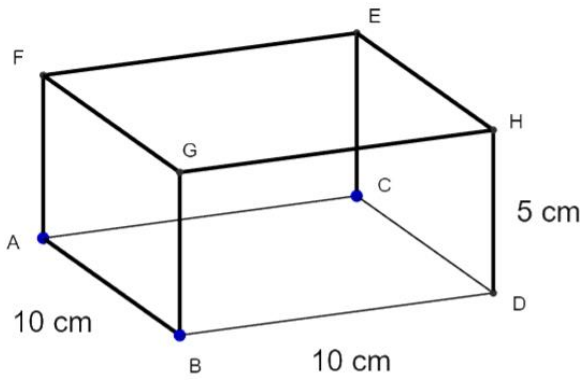

STEP 1:
Highlight the diagonal that you want to calculate. See the red triangle.

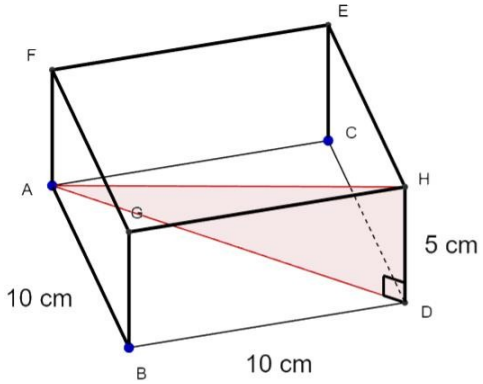

STEP 2:
Highlight any unknown lengths – AD.
Draw another triangle, that will enable to calculate the unknown length (see blue triangle).

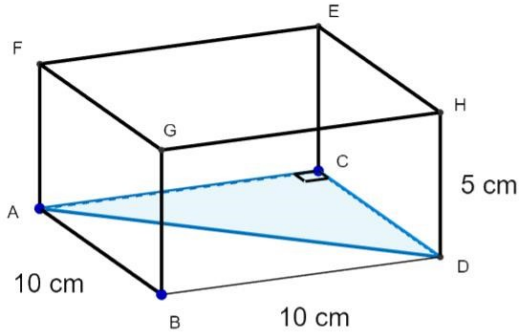

STEP 3:
Draw and label each triangle separately.
Take care when writing the side lengths,

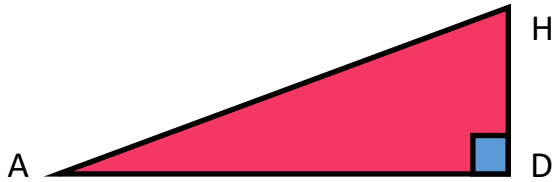

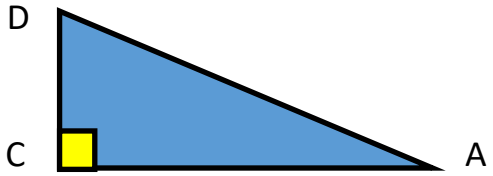

where AD is unknown,

DH = 5cm,

AH is the diagonal we want to find

where AC = 10cm,

CD = 10cm,

AD is unknown.

STEP 4:
Apply Pythagoras' Theorem—firstly to the blue triangle, which returns

$(AC)^2 + (CD)^2 = (AD)^2 = (10)^2 + (10)^2 = 100 + 100 = 200.$

Do we need to take the square root?

Apply Pythagoras' Theorem to the red triangle, which returns

$(AD)^2 + (DH)^2 = (AH)^2 = 200 + 25 = 225.$ Finally, take the square root, to find AH = 15cm.

Practice B: To identify and label right angled triangles in 3D-shapes

1) Use your diagrams from Practice A, to calculate the length of the diagonal CG

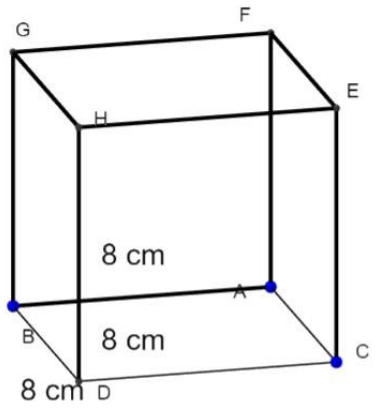

2) Again, use your diagrams from Practice A, to calculate the length of the diagonal FD

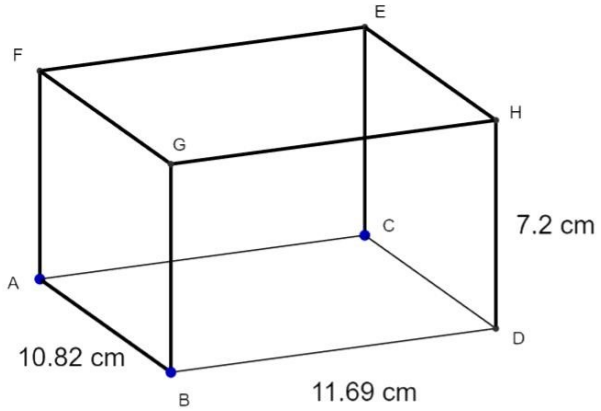

3) Gladys' cube has volume $343m^3$. Calculate the length of its diagonal.

4) A cuboid with two square faces of dimension y cm and surface area of $18y^2$. Calculate the length of its diagonal.

5) A) Fred's cube is proportional to Gladys', in such a way that the volume is double. Calculate the length of diagonal.

B) How are the side lengths of Fred's and Gladys' cubes related?

Assessment B: To identify and label right angled triangles in 3D-shapes

1) A cuboid has a height of 30cm, width of 25cm and length 40cm. What is the largest pipe that can fit into this box?

A) 47.2cm *B) 36.4cm* *C) 55.9cm* *D) 50cm*

2) Bill owns an old Volvo estate. The boot is 1230mm high and its base measures 1772mm by 1653m. Bill is going to IKEA and wants to know the longest possible length he can fit into the boot. Make your answer as accurate as possible.

Plenary: Generalising Pythagoras' Theorem

Earlier, we posed the question—`Do we really need to take the square root?'

Use the diagram below to spark your imagination! Make some notes about your thoughts, then return to the worked example on page 22 to discuss your thoughts and ideas.

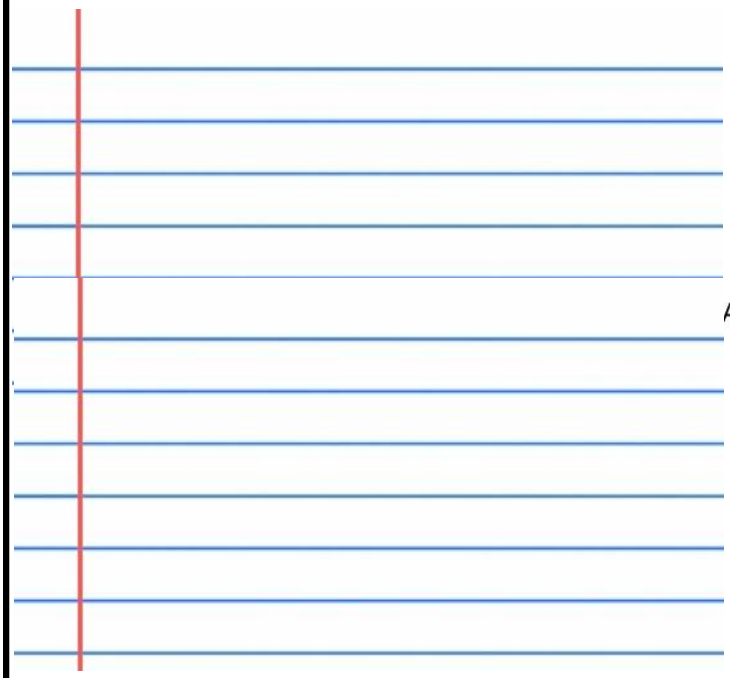

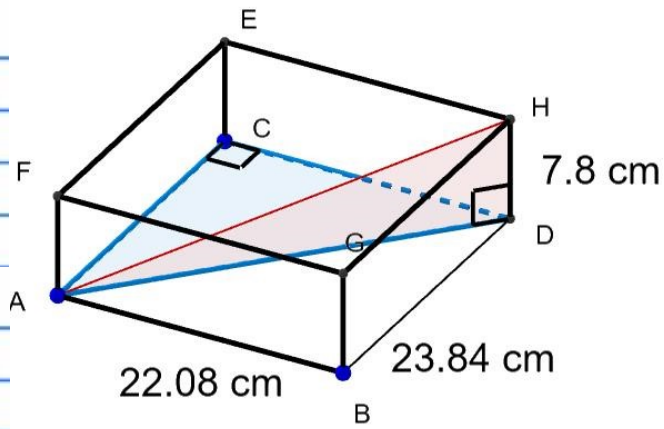

Tutorial 5: Pythagoras' Theorem and 3D-shapes

The purposes of this tutorial are:

A. To identify right angles in many 3D-shapes

B. Calculate missing lengths in many 3D-shapes and apply knowledge to contextual questions

Starter:

Calculate the length of the cuboid's diagonal:

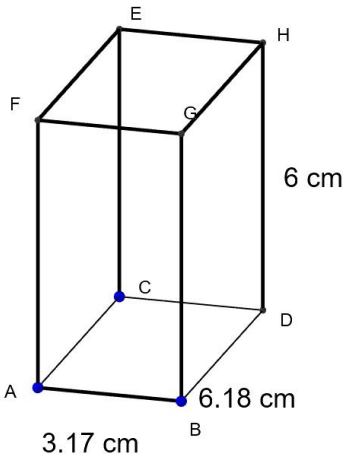

How can you ensure your answer is as accurate as possible.

Objective A: To identify and label right angled triangles in 3D-shapes

Worked example 1:

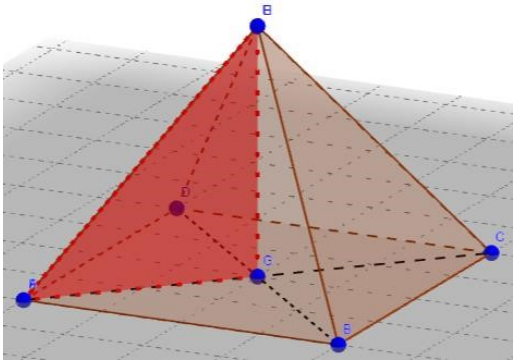

We must also calculate lengths in other 3D-shapes. In order to do this, we must be able to highlight right angled triangles .

For example, examine the square based pyramid to left.

The red triangle highlighted can help us calculate the slope of the pyramid or its height.

Worked example 2:

The red arrow highlights one particular diagonal of the pentagonal prism and the blue dotted lines complete the right angled triangle.
However, we might need to consider the properties of shapes to find other missing lengths.

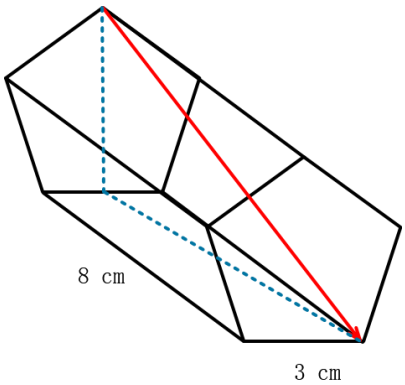

Practice A: To identify and label right angled triangles in 3D-shapes

1) Identify all right angled triangles necessary to calculate the length of the diagonal FA.

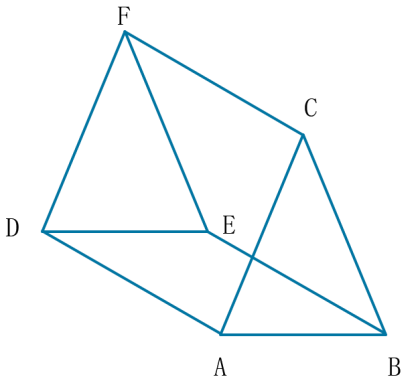

2) Identify as many right angled triangles as possible and label the quantities that you will find.

A)

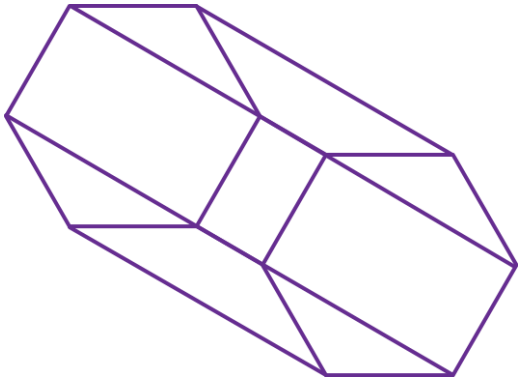

B)

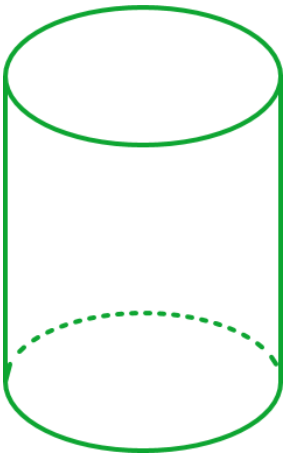

C)

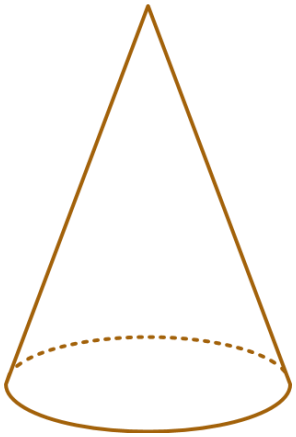

D)

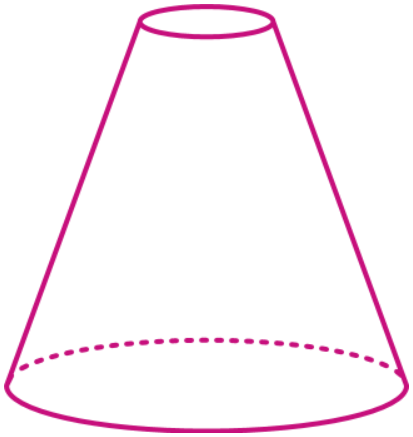

E)

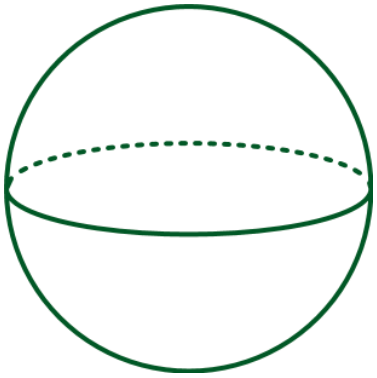

F)

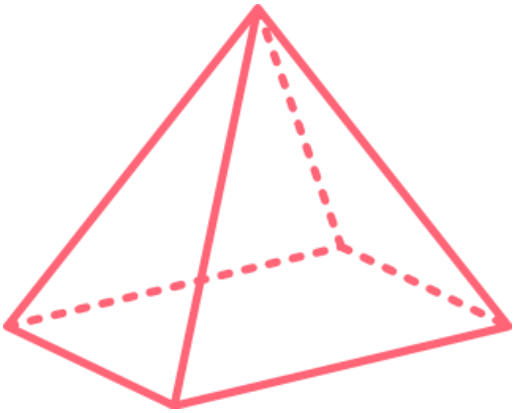

Assessment A: To identify and label right angled triangles in 3D-shapes

1) Sybil has drawn a triangle, labelled by blue dotted lines. Do you agree with her diagram? Can you improve/correct the diagram?

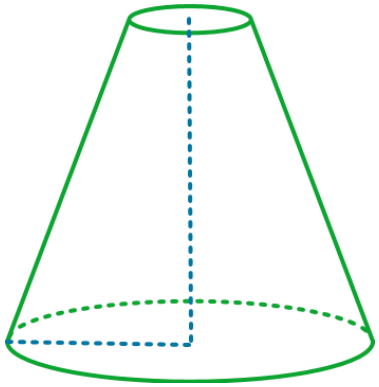

2) A) What is the brown shape below?

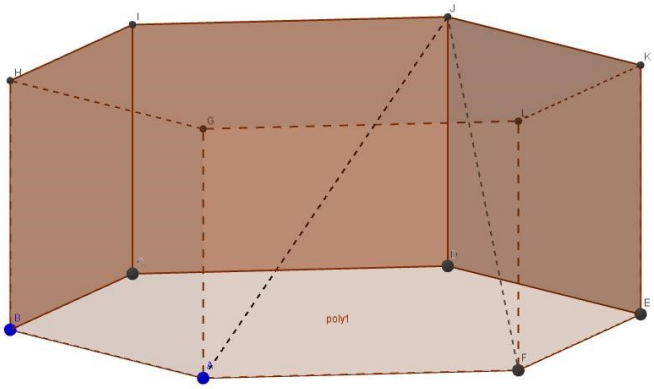

B) The shape is regular, each length is 5mm. What other triangles are necessary to calculate the lengths AJ and FJ?

Objective B: Calculate missing lengths in many 3D-shapes

Worked example 1:

A frustum has a circular base with radius 8cm, circular top with radius 2cm and height 10cm.

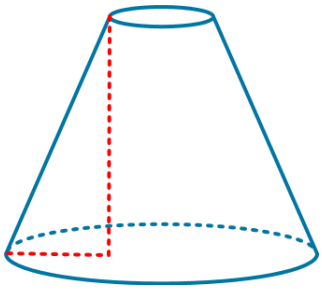

Calculate the slope of the frustum.

We need to calculate the length of the red dotted lines.

The vertical line is simply the height.

Use what the question gives you!

We must consider the properties of the shape to find the horizontal length. The circular base has a diameter 16cm and the top has a diameter of 4cm.

Horizontal length = $\frac{16-4}{2} = \frac{12}{2} = 6$ cm.

Objective B: To calculate missing lengths in many 3D-shapes.

Worked example 1 continued:
We now have the required information, so we can easily apply Pythagoras' Theorem.

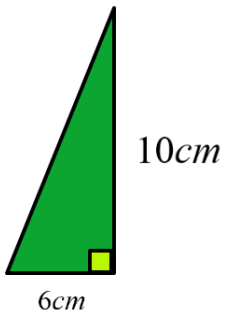

The length of the slope = $\sqrt{10^2 + 6^2} = \sqrt{136} = 11.67cm$

Practice B: To calculate missing lengths in many 3D-shapes

1)

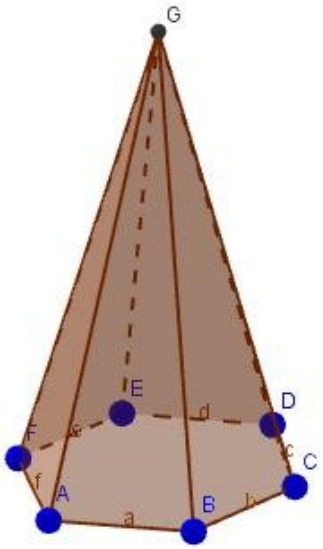

The base of the hexagonal pyramid is a regular pyramid. Each side length is 2cm and the slope is 6cm.

Calculate the perpendicular height of vertex , G, above the hexagonal base.

2) A door wedge has dimensions:

PQ = 3.8cm, RQ = 23.8cm, RT = 2.5cm

Calculate the length of the diagonal PT

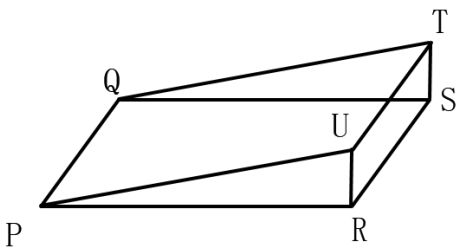

3)

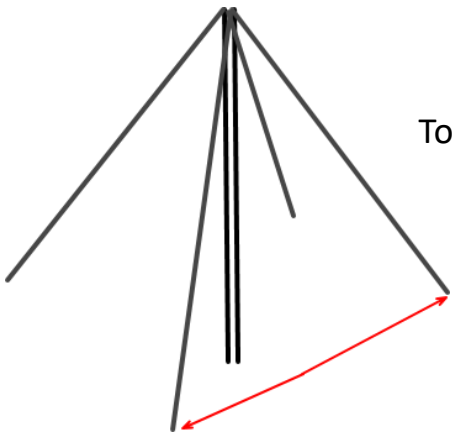

To the left is picture of a guyed mast.
Guys are wire rope.

How much wire rope is needed?

The distance between guys is 56.6 feet.

Practice B: To calculate missing lengths in many 3D-shapes

4)

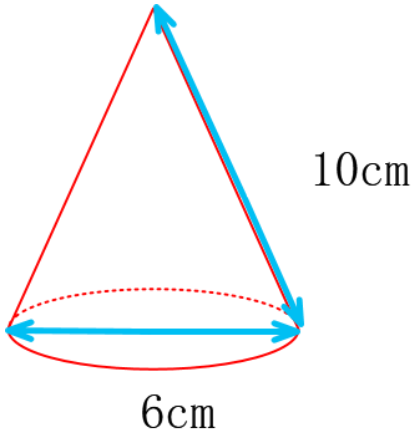

Calculate the volume of the cone.

Assessment B: To calculate missing lengths in many 3D-shapes

1) Janet is creating a Christmas decoration. It cannot be more than 7cm long. If she plans to make the regular hexagonal base with 2cm sides and slopes that are 6cm long.

The top elevation is given in the diagram below:

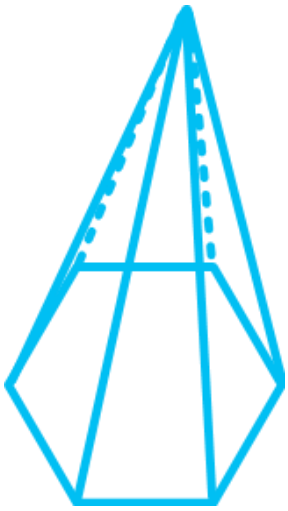

2) A skate park is going to create a large ramp.

It requires two supports that run diagonally between the vertices.

The metal struts cost £1.25 per metre,
How much will the struts cost?

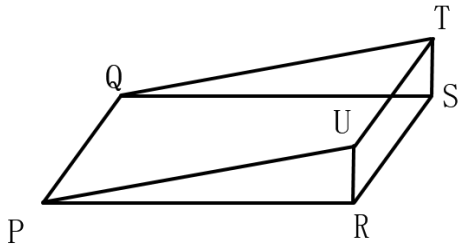

The dimensions of the ramp are: PQ = 8m, PR = 10m, TS = 4m .

Tutorial 6 – Revision Techniques/Final Assignment

Sometimes revising can be painful, and sitting the exam even worse! But, do not fear, because below you will find some (hopefully) helpful tips that will help you to revise all subjects and not just maths.

1) **Get organised -** Organise your notes/books and create a list of topics to revise.

- Create a timetable to plan exactly when you are going to revise and be strict with yourself! Try to break your revision into small-ish chunks and remember to include some rest time.
- Include every topic, even the topics you do not like. The exam will not consist of "your favourite" questions! Imagine how rewarding it will be when you can tackle any question!

2) **Practice -** Humans often learn well when they practice a skill over time. Make sure you practice as many different questions and types of question as possible.

- If you become stuck, use your notes, revision guides and the internet to help you. If you really cannot solve the problem, ask your teacher!
- Ask your teacher where you can to find GCSE-style questions and keep practising—even the topics you don't like! It's better to practise them with lots of time and your books/internet, some of them will appear in the exam!

3) **Test Yourself -** It is important to test yourself, to show you that the information is 'sticking' in your memory.

- Over time, you will notice how you improve and how easy it becomes to answer questions!

You might have noticed that we followed this structure throughout the course! Hopefully, it will help you to deal with all things Pythagoras.

Most importantly - ***TRY NOT TO WORRY!***

Remember to take all necessary equipment to the exam. If you can't answer a question, move on.

If you can use a calculator, make sure you know how to use it. You will be able to use your calculator more **effectively** and **efficiently** if you **practise** many different questions.

Tutorial 7 – Feedback tutorial

What is the Purpose of Tutorial 7?

- To receive feedback on final assignments.
- To share examples of best practice with the other pupils in your group.
- To write targets for improvement in school lessons.

To reflect on the programme including what was enjoyed and what was challenging.

Final assignment feedback

What I did well…	What I could have improved on…

My target for future work is…

Reflecting on Uni Pathways

What did you most enjoy about Uni Pathways?

What did you find challenging about the programme?	How did you overcome these challenges?

Appendix 1 – Referencing correctly

When you get to university, you will need to include references in the assignments that you write, so we would like you to start getting into the habit of referencing in your Brilliant Club assignment. This is really important, because it will help you to avoid plagiarism. Plagiarism is when you take someone else's work or ideas and pass them off as your own. Whether plagiarism is deliberate or accidental, the consequences can be severe. In order to avoid losing marks in your final assignment, or even failing, you must be careful to reference your sources correctly.

What is a reference?

A reference is just a note in your assignment which says if you have referred to or been influenced by another source such as book, website or article. For example, if you use the internet to research a particular subject, and you want to include a specific piece of information from this website, you will need to reference it.

Why should I reference?

Referencing is important in your work for the following reasons:

It gives credit to the authors of any sources you have referred to or been influenced by.
It supports the arguments you make in your assignments.
It demonstrates the variety of sources you have used.
It helps to prevent you losing marks, or failing, due to plagiarism.

When should I use a reference?

You should use a reference when you:

Quote directly from another source.
Summarise or rephrase another piece of work.
Include a specific statistic or fact from a source.

How do I reference?

There are a number of different ways of referencing, and these often vary depending on what subject you are studying. The most important to thing is to be consistent. This means that you need to stick to the same system throughout your whole assignment. Here is a basic system of referencing that you can use, which consists of the following two parts:

1. A marker in your assignment: After you have used a reference in your assignment (you have read something and included it in your work as a quote, or re-written it your own words) you should mark this is in your text with a number, e.g. [1]. The next time you use a reference you should use the next number, e.g. [2].

2. Bibliography: This is just a list of the references you have used in your assignment. In the bibliography, you list your references by the numbers you have used, and include as much information as you have about the reference. The list below gives what should be included for different sources.

Websites – Author (if possible), title of the web page, website address, [date you accessed it, in square brackets].

E.g. Dan Snow, 'How did so many soldiers survive the trenches?', http://www.bbc.co.uk/guides/z3kgjxs#zg2dtfr [11 July 2014].

Books – Author, date published, title of book (in italics), pages where the information came from.

E.g. S. Dubner and S. Levitt, (2006) *Freakonomics*, 7-9.

Articles – Author, 'title of the article' (with quotation marks), *where the article comes from* (newspaper, journal etc.), date of the article.

E.g. Maev Kennedy, 'The lights to go out across the UK to mark First World War's centenary', Guardian, 10 July 2014.

Notes

Notes

Notes

UNI PATHWAYS

UNI PATHWAYS

thebrilliantclub.org