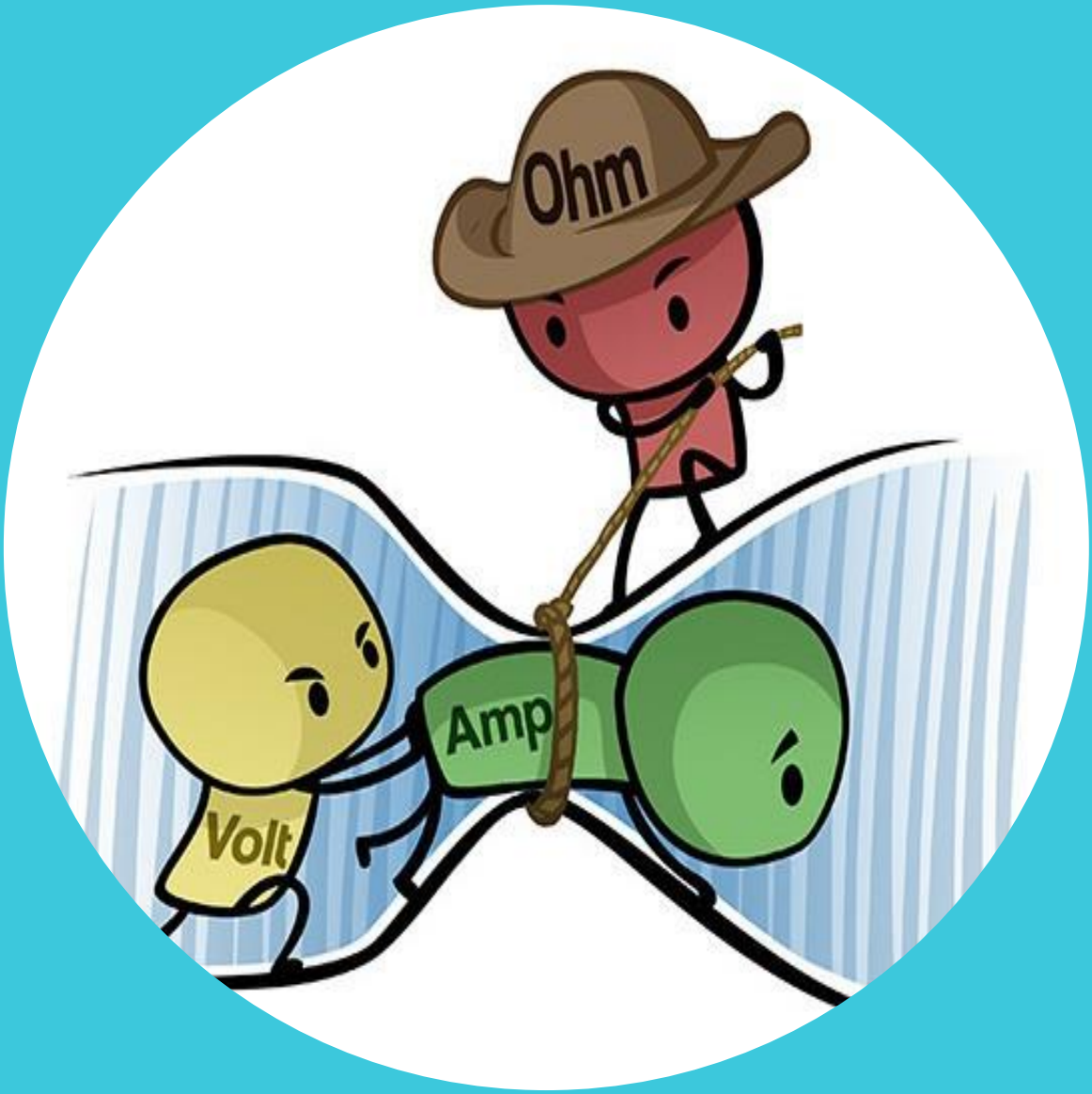

Current events

Key Stage 4 Revision Programme

Pupil Name	
Handbook Designed by	Dr Stutchbury

Timetable and Assignment Submission

Timetable - tutorials

Tutorial	Date	Time	Location
1 (Baseline assessment)	W/B 9th Dec	3:00pm	TBC
2	W/B 13th Jan	3:00pm	S5
3	W/B 20th Jan	3:00pm	S5
4	W/B 27th Jan	3:00pm	S5
5	W/B 3rd Feb	3:00pm	S5
6 (Final assessment)	W/B 10th Feb	3:00pm	S5
7 (Feedback)	TBC	3:00pm	TBC

Contents

Course Rationale	P4
Glossary of Keywords	P5
Tutorial 1	P6
Tutorial 2	P7
Tutorial 3	P13
Tutorial 4	P20
Tutorial 5	P27
Tutorial 6	P35
Tutorial 7	P36

Course rationale

Two people want to learn how to play the electric guitar. The first person spends hours reading everything there is to know about electric guitar theory, without ever touching a guitar. The second person picks up an acoustic guitar and practices for hours on end.

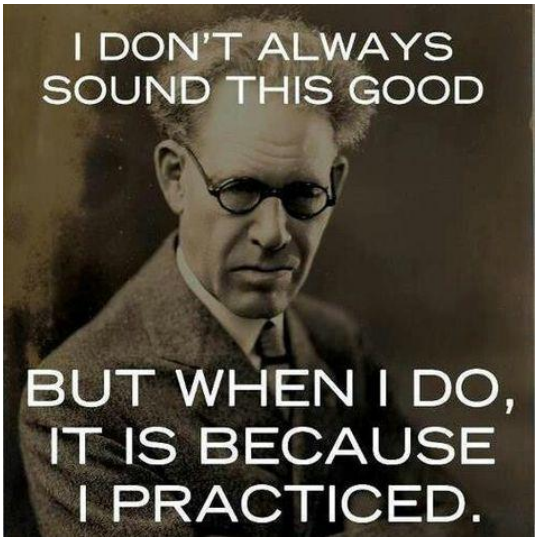

Neither have ever played the electric guitar, but who do you think will be better?

The best way to learn is to practice.

What about revising for your GCSEs?

As I said, **the best way to learn is to practice.**

There is a mountain of research that shows that **reading textbooks and revision guides is an extremely inefficient way to prepare for your exams**. They take *a lot* of effort for *very little* reward.

The best way to prepare for answering a range of GCSE questions, is to practice answering a range of GCSE-style questions. Makes sense, right?

They don't even have to be the same types of questions. The practice helps your brain understand how to answer GCSE questions. Just like practicing an acoustic guitar helps you to understand how to play an electric guitar. The skills are transferable.

And speaking of electric guitars, we need electricity to make them work. That's what we will be studying in these tutorials. Does that sound like a BRIGHT idea? ExCELLent.

WIRE we studying this, I hear you ask?

CURRENTly, this is the topic we find Year 10s and Year 11s struggle with the most in Physics. The answers are often SHOCKING. There are lots of COMPONENTS to cover - equations to remember, definitions to learn and it's really difficult to conceptualise, so you'll have to be SWITCHED ON. Some people don't have the POTENTIAL, DIFFERENCE is, you guys do.

So take this workbook, it's free, no CHARGE, and we will practice the key concepts in SERIES. I'm sure there will be some RESISTANCE and you'll find your brain HERTZ, but keeping at it is PIVitol. I'm sure you'll reach that LIGHTBULB moment. You have the POWER, so LED the way.

OHM my God, these puns are on point.

Subject vocabulary

Word	Definition	In a sentence
Charge	An electrical property – it can be either positive or negative. Measured in Coulombs.	
Current	The rate of flow of electrical charge. Measured in Amps	
Potential difference	The difference in how much energy each Coulomb of charge has at two points in a circuit. Measured in Volts.	
Resistance	How difficult it is for electrical charge to flow through a component. Measured in Ohms.	
Power	The amount of energy transferred by a circuit each second. Measured in Watts.	

1. Switching on

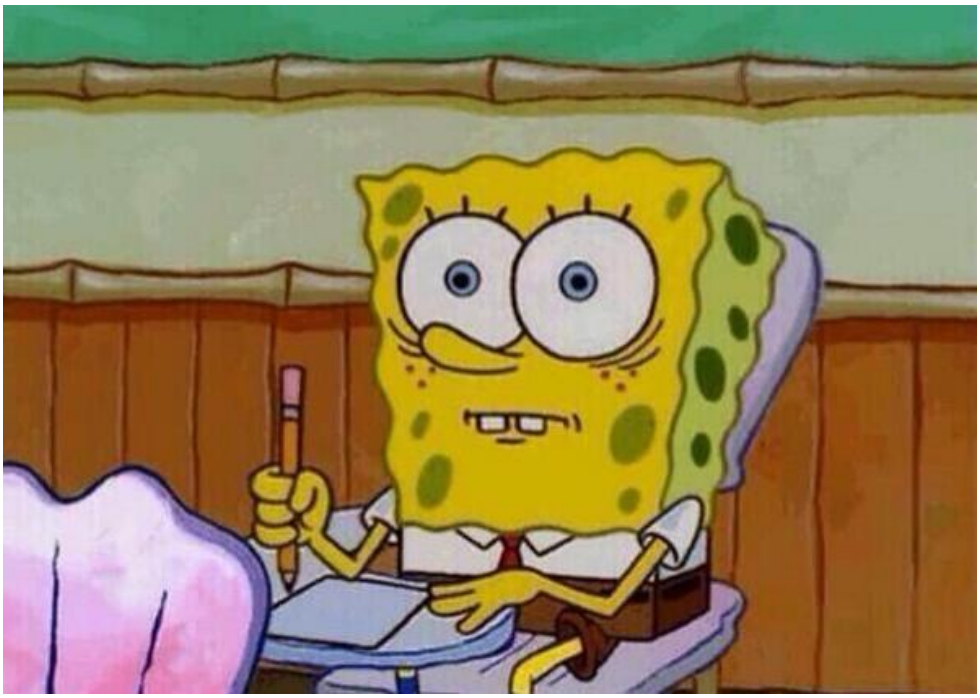

Welcome to Uni Pathways 2! The first tutorial is all about seeing how much you know at the start. Don't worry if you don't know many answers (that's kind of the point!). Just have a go and see how much you can remember.

Objectives this tutorial:

A. Complete the Pre-SEF
B. Complete the baseline assessment

2. Current events

Keywords: Current, charge, amp, coulomb, series, parallel

Objectives this tutorial:

A) Defining current
B) Calculating current
C) Calculate current in series and parallel circuits

Starter: To prove that lightning is an electrical current, Benjamin Franklin allegedly flew his kite during a storm.

He attached a metal key to the kite's silk string and made sure he stood under a shelter. What was the purpose of:

The key:
The silk string:
The shelter:

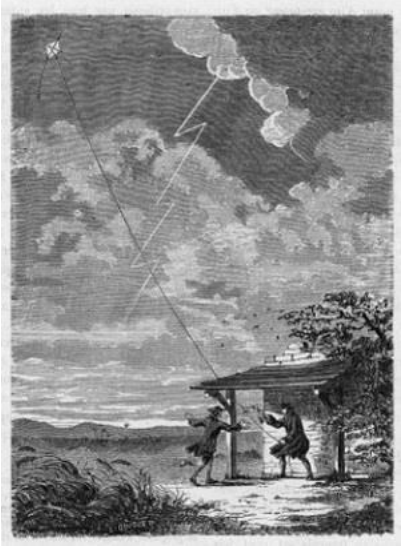

Objective A: Defining current

Charge is an electrical property – it can be either positive or negative. Current is the **rate of flow of electrical charge**. It is a *rate* – the amount of charge that flows through a circuit each second. In a metal wire, charge is carried by delocalised electrons.

The rate of flow of charge – the current – is defined by the equation: $I = Q/t$

- I is current (in Amps (A))
- Q is charge (in Coulombs (C))
- t is time (in Seconds (S))

This means that in a current of 1 A, 1 C of charge will flow past a point in 1 second.

Note – a coulomb is a big ball of about 6.2×10^{18} electrons!

Practice A: Defining current

1) State the equation for current. Make sure you include the units!

2) From the equation, how do you know that current is the ***rate*** of flow of charge?

3) Is the charge flowing through a circuit positive or negative? How do you know?

4) 18 C of charge flow through a circuit in 6 seconds. Calculate the current.

5) (Meaty question) How many electrons flow through the same circuit each second?

Assessment A: Defining current

Which statement is incorrect?

A	1 Amp is the same as saying 1 Coulomb per second
B	If more electrons flow through a wire each second, the current will decrease
C	Ions are able to carry electrical charge through a liquid
D	Current is the rate of flow of charge

Objective B: Calculate current and charge

Worked example 1

20 C of charge flow through a circuit in 1 minute.

a) Calculate the current.

t = 1 minute
= 60 seconds ← conversion

Study tip
Don't forget to convert non-standard units into standard units!

I = Q/t

I = 20 C/60 s
I = 0.3 A ← units

b) How many electrons flow in 15 seconds?

I = Q/t
0.3 A = Q/15 s ← substitute in values
Q = 0.3 A x 15 s ← rearrange
Q = 4.5 C ← units

Study tip
To find the total number of electrons, multiple the number of coulombs by the number of electrons in one coulomb.

Number of electrons = 4.5 C x 6.2 x 10^{18}
Number of electrons = 2.8 x 10^{19}

Study tip
Only answer to the same number of decimal places or significant figures that are given in the question.

Worked example 2

A lamp operates at 600 mA.
How long does it take for 22.8 C to flow through the lamp?

600 mA/1000 = 0.6 A

I = Q/t

0.6 A = 22.8 C/t ← substitute in values
t = 22.8/0.6 ← rearrange
t = 38 s ← units

Practice B: Calculating current

1. 56700 C of charge pass through a laptop in 2.5 hours. Calculate the current of the laptop.

2. A circuit has a current of 8.5 A. How much charge flows through the circuit in 0.5 minutes?

3. A bolt of lightning transfers a charge of 15 C in 5.0×10^{-4} seconds. Calculate the current. Give your answer in standard form.

4. A student charged a power pack that could store 6 kC of charge for 6 hours using a current of 250 mA. What percentage of its capacity was the power pack charged to?

5. A set of lights consists of 20 lamps connected in series to the 50 V electricity supply. When the lights are switched on and working correctly, the current through each lamp is 0.25 A. Calculate the number of electrons passing through the circuit in 5 minutes.

Assessment B: Calculating current

Calculate the charge that flows through a thermistor in 0.2 minutes when the current is 3.5 mA.

A	0.42 C
B	4.2×10^{-2} C
C	42 C
D	0.007 C

Objective C: Calculate current in series and parallel circuits

Current is measured using an ammeter, connected in series (in line with) with the other components in a circuit. Current behaves differently in series and parallel circuits, and you need to know the difference!

In series circuits: current is the <u>same at every point</u> in the circuit

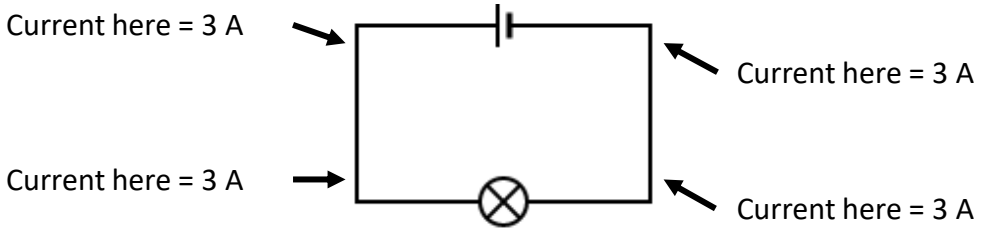

In a parallel circuit: current is <u>split between the branches</u> of the circuit. The total current in the circuit equals the sum of all the branches. But remember, it doesn't have to split equally between them.

Example 1

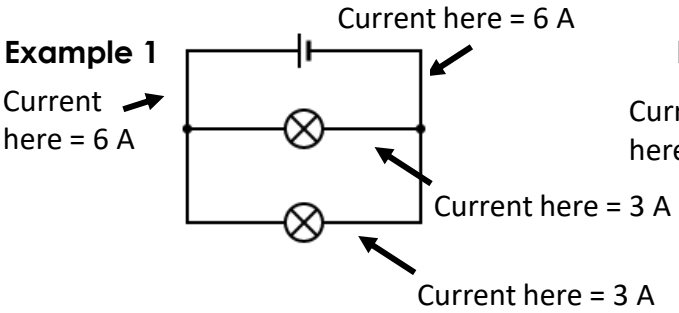

Example 2

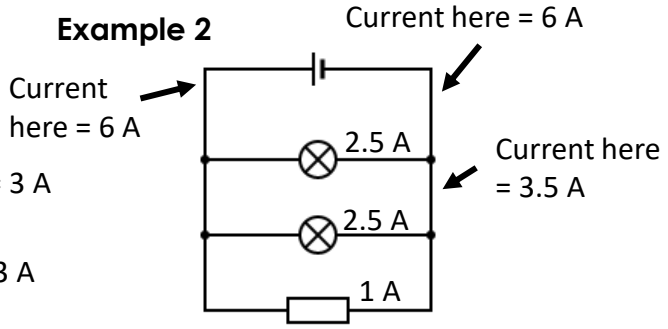

Worked example

Calculate the current through each of the ammeters in the circuit.

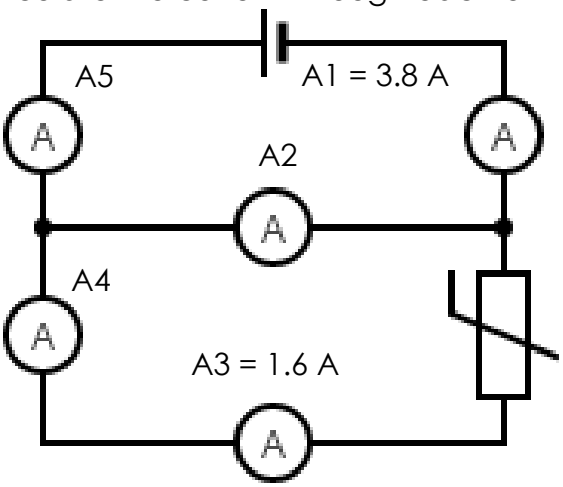

Study tip
Remember, at a junction, the current splits between the branches.

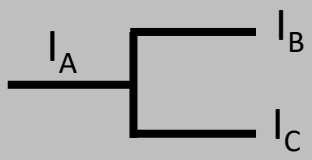

$$I_A = I_B + I_C$$

<u>Current through ammeter A2</u>
Before A2, the current splits between 2 loops. We know that 1.6 A goes to one branch so the rest must go to the other branch.

A1 = A2 + A3
A2 = A1-A3 = 3.8 A-1.6 A = 2.2 A

<u>Current through ammeter A4</u>
This is the same loop as A3, so follows the rules for current in a series circuit:

A4 = A3 = 1.6 A

<u>Current through ammeter A5</u>
The two loops come back together, so following the rules for a parallel circuit:

A5 = A2 + A3 = 2.2 A + 1.6 A = 3.8 A

It is also in the same loop as A1, so behaves like a series circuit:

A 5 = A 1 = 3.8 A

Practice C: Calculate current in series and parallel circuits

1. Calculate the current at each ammeter

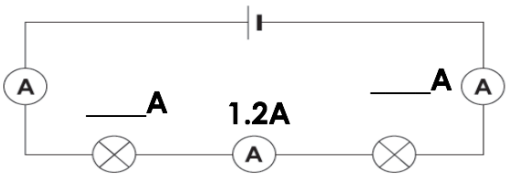

2. Dan says, "Ammeter 1 will show a lower reading than Ammeter 2 because the bulbs in the circuit use up the current." Tom says, "Ammeter 1 will show the same reading as Ammeter 2 because current is not used up."
   Who is right?

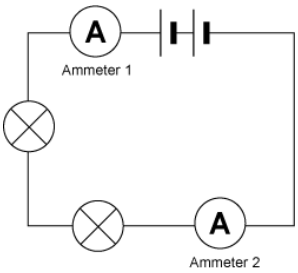

3. Compare the currents I_1, I_2 and I_3

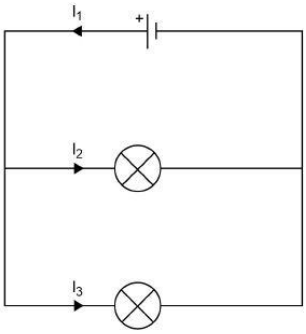

4. Calculate the current at each ammeter

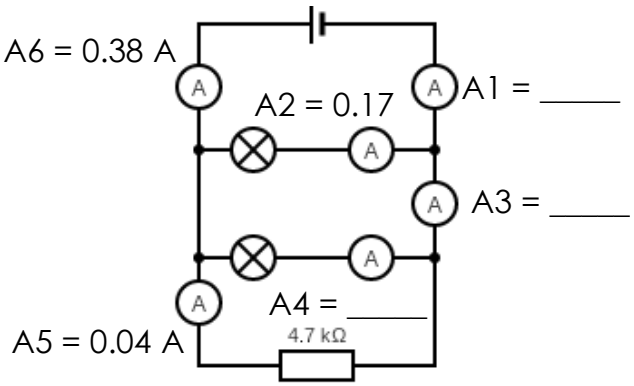

Assessment C: Calculate current in series and parallel circuits

Which equation is wrong about the following circuit?

A	A1 = A2 + A3 + A4
B	A4 = A5
C	A7 = A1
D	A2 = A1 – A6
E	A6 = A2 + A3

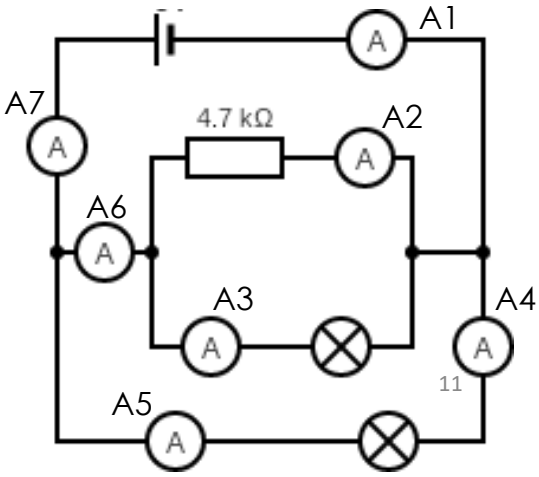

Notes

3. Potentially the same, potentially different

Keywords: potential difference, volt, series, parallel, power, watt

Objectives this tutorial:

A) Defining potential difference
B) Calculating potential difference in series and parallel circuits
C) Calculating power using potential difference and current

Starter:
A delivery driver must return to the depot when they are out of packages, to get a refill.

Each time they stop, they drop off some packages, but not necessarily all of them. When they have made all of their stops, they return to the depot to collect more.
How do you think this relates to an electrical circuit?

Objective A: Defining potential difference

Potential difference is a weird one. It can be quite difficult to understand.
It is the <u>*difference*</u> in electrical potential between two points in a circuit.

Let's break that down a bit more. It is the *difference* in how much energy each Coulomb of charge has at two points in a circuit. If at one point, each Coulomb has 7 Joules and at another point each Coulomb has 4 Joules, the potential difference is 3 Joules per Coulomb. The potential difference is 3 Volts (V).

Cells and batteries transfer energy to each coulomb of charge – they give them a push to get around the circuit. For example, a 6 V battery delivers 6 Joules of energy to every 1 Coulomb of charge.

This energy is then transferred to power the components of the circuit. The amount of energy that is transferred to a component by each Coulomb is equal to the potential difference across the component.

Note – some people say 'voltage' when they mean potential difference. This is not scientific enough, so use of the word voltage is banned in this room.

Practice A: Defining potential difference

1) Summarise what is meant by potential difference in one sentence

2) Potential difference is measured in Volts. What other unit could be used to measure p.d.?

3) A circuit has a 12 V battery. The potential difference across a bulb is 3 V. How many Joules does each Coulomb have left after the bulb?

4) Explain why a lamp does not light up when the batteries have gone flat

Assessment A: Defining potential difference

What is the best definition for potential difference?

A	The amount of energy that is transferred between two points in a circuit
B	The amount of energy given to each Coulomb in a circuit
C	The amount of energy that is transferred by each Coulomb between two points in a circuit
D	The rate of flow of charge

Objective B: Calculate potential difference in series and parallel circuits

The potential difference across a component in a circuit is measured using a voltmeter, connected in parallel (around) the component. Potential difference does the opposite to current in series and parallel circuits, so it can, *potentially*, be confusing!

In series circuits: potential difference is the split between the components in the circuit. The total potential difference provided by the power supply equals the sum of all the branches. If the components have the same resistance, the potential difference is split equally.

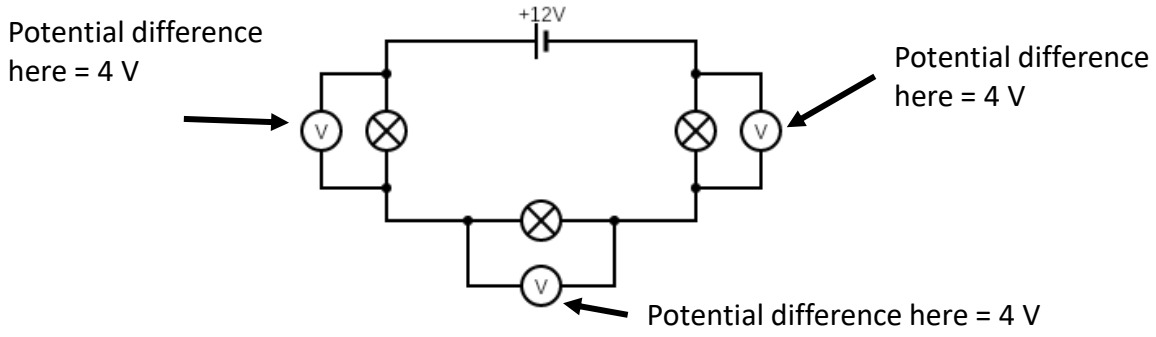

In parallel circuits: potential difference is the same on each branch of the circuit. If there are 2 or more components on a branch, the potential difference of that branch is shared between them.

Example 1

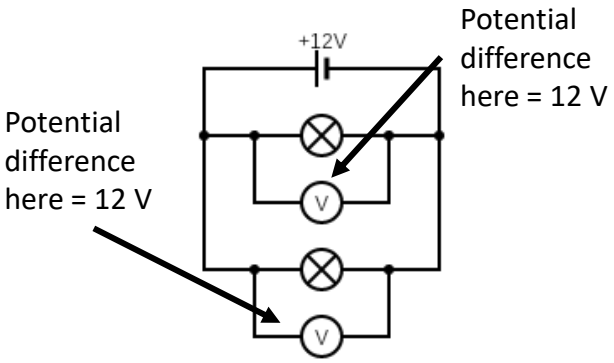

Example 2

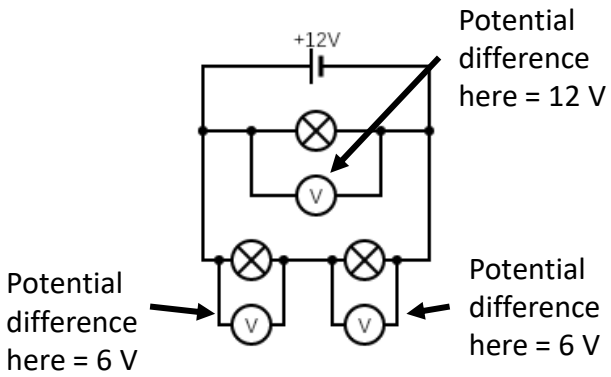

Worked example

Calculate the potential difference reading on each voltmeter in the circuit

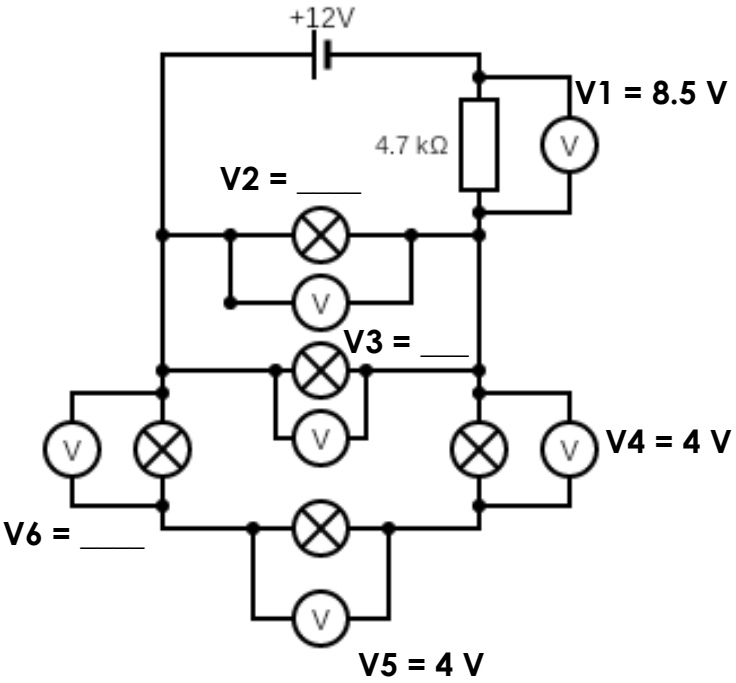

<u>Potential difference through voltmeter V2</u>
We know that 12 V was delivered by the cell. Before V2, 8.5 Joules per Coulomb are dropped at the resistor.

12 v = V1 + V2
V2 = 12 V - 8.5 V
V2 = 3.5 V

<u>Potential difference through voltmeter V3</u>
12 V are delivered to this loop and there is only one component, so all of the energy is transferred to this bulb.

V3 = 12 V

<u>Potential difference through voltmeter V6</u>
12 V are delivered to this loop. Therefore, we know that:

12 v = V4 + V5 + V6
V6 = 12 V – 4 V – 4 V
V6 = 4V

Study tip

In series:

V_{TOT} = V1 + V2 + V3…

In parallel:
$V_{TOT} = V_{BRANCH\ 1} = V_{BRANCH\ 2} = V_{BRANCH\ 3}\cdots$

Practice B: Calculate potential difference in series and parallel circuits

1. Calculate the potential difference at each voltmeter

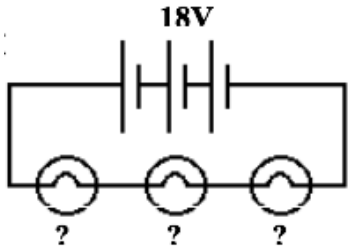

2. Calculate the potential difference at each voltmeter

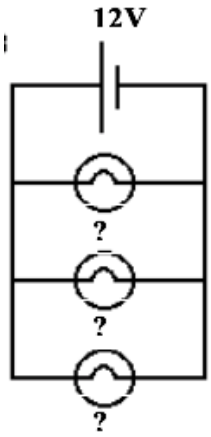

3. Calculate the potential difference at each voltmeter

V1 =

V2 =

V3 =

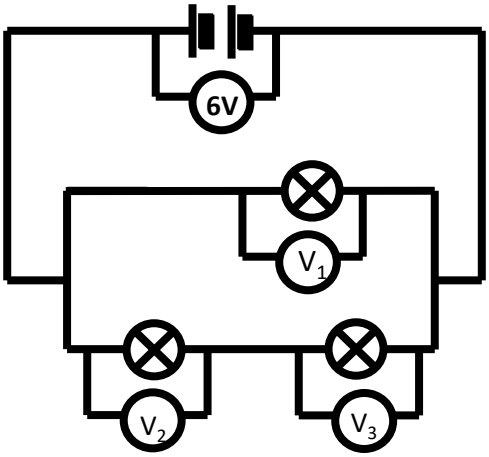

4. Which blub will be brightest in this circuit and why?

_____

_____

_____

_____

_____

Assessment B: Calculate potential difference in series and parallel circuits

Draw circuit diagrams to show four lamps connected to a 12 V battery so that:

a) each has a p.d of 12 V across it
b) each has a p.d. of 6 V across it
c) each has a p.d. of 3 V across it

Objective C: Calculating power using potential difference and current

WE KNOW SO FAR:

Current
The number of Coulombs that flow each second

AND

Potential difference
The amount of energy transferred by each Coulomb

We can use these two definitions to work out **power**.

Power
The amount of energy transferred each second

To work that out we need to know **two** things.

1. We need to know the amount of energy that is transferred by each Coulomb
2. We need to know the number of Coulombs that flow each second

Sound familiar?

Power The amount of energy transferred each second = **Current** The number of Coulombs that flow each second X **Potential difference** The amount of energy transferred by each Coulomb

OR, put more simply

Power = Current x Potential difference

OR, even more simply

P = IV

You might be wondering…

Power is measured in Watts?

No, that's it, it's measured in Watts (W).

Worked example

A new shower has a power output of 10,580 W when it is connected to the 230 V mains electricity supply.

Calculate the charge that flows through the shower in 2 minutes.

P = IV
10,580 = I x 230 ← substitute in values
I = 10,580/230 ← rearrange
I = 46 A ← units

t = 2 minutes
= 120 seconds ← conversion

Study tip
Don't forget to convert non-standard units into standard units!

I = Q/t
46 = Q/120 ← substitute in values
Q = 46 x 120 ← rearrange
Q = 5,520 C ← units

Practice C: Calculating power using potential difference and current

1) What equation links power, potential difference and current

2) A portable heater is connected to a 115 V battery. A current of 500 mA flows through the heater. Calculate the power of the heater.

3) A large machine generates 60 kW of power. How much current flows through the machine when connected to an 120 V power supply?

4) The charge that flows through a new shower in 5 minutes is 18,000 C.
The new electric shower has a power of 13.8 kW

Calculate the potential difference of the power supply to the shower

Assessment C: Calculating power using potential difference and current

The table shows the current drawn from the 230 volt mains electricity supply when different parts of the hairdryer are switched on.

	Current in amps
Fan only	1.0
Fan and heater 1	4.4
Fan and both heaters	6.5

Calculate the maximum power of the hairdryer.
Show clearly how you work out your answer and give the unit.

Notes

4. Resistance is NOT futile

Keywords: resistance, Ohm, series, parallel, current, potential difference

Objectives this tutorial:

A) Defining resistance
B) Resistance in series and parallel circuits
C) Ohm's law in series and parallel circuits

Starter:

Using the picture, come up with a definition for resistance

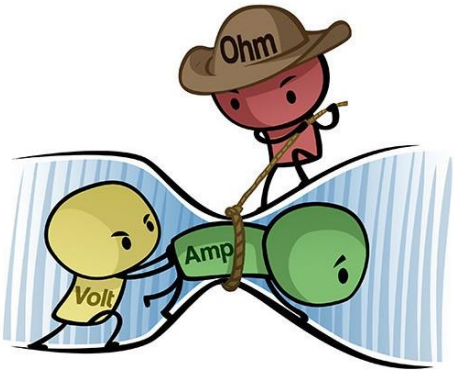

Objective A: Defining resistance

Put simply, resistance tells us how difficult it is for electrical charge to flow through a component.

If a component has a high resistance, it is really difficult for the charge to get through it. If an object as a low resistance, it is dead easy for charge to flow through.

It stands to reason, therefore, that conductors have a low resistance and insulators have a high resistance.

Resistance is measured in Ohm's (Ω), named after the German physicist Georg Ohm.

Practice A: Defining resistance

1. If an object has a high resistance, what does this tell us about the flow of electrical charge through it?

2. Which object do you think has a higher resistance: a wooden pole or a piece of aluminium foil? Why?

3. Which has a higher resistance: 47 MΩ or 6.2×10^6 Ω?

4. If the resistance is increased, what will happen to the current flowing through a component?

5. If resistance stays the same and the potential difference of the power supply is doubled, what do you think will happed to the current?

Assessment B: Calculate potential difference in series and parallel circuits

Which statement(s) are incorrect?

A	The resistance of an object tells us how hard it is for charge to pass through it
B	If an object has a high resistance the current passing through it is likely to be low
C	Increasing the potential difference has no effect on the current through a component
D	When resistance is constant, current and potential difference are directly proportional

Objective B: Resistance in series and parallel circuits

Just like current and p.d., resistance behaves differently in series and parallel circuits.

In series circuits:
The total resistance is the sum of all of the resistors in the circuit. Nice and easy.

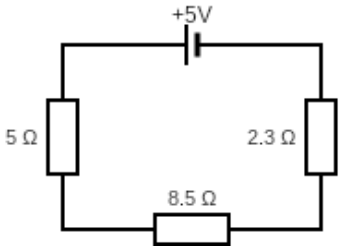

Total resistance in the circuit =

5 Ω + 8.5 Ω + 2.3 Ω = 15.8 Ω

A simple way to write this is:

$R_{TOT} = R_1 + R_2 + R_{3...}$

In parallel circuits
This one is a little more complicated.

The total resistance in a parallel circuit is LOWER than the smallest resistor in the circuit.

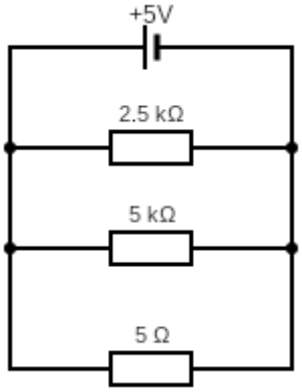

Smallest resistor in the circuit = 5 Ω

Total resistance is less than 5 Ω

You will not be asked to calculate the total resistance in parallel, you just need to be able to say that it is:

LOWER than the smallest resistor in the circuit

Practice B: Resistance in series and parallel circuits

1. What do you know about the resistance of this circuit?

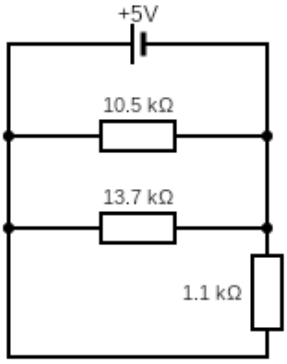

2. Calculate the total resistance of the circuit. Give your answer in Ohms, in standard form.

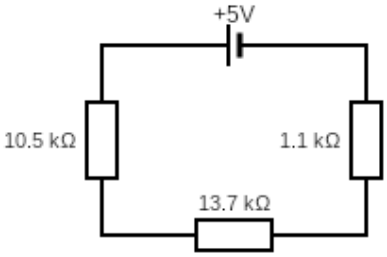

3. Another resistor is added to this circuit in series. What effect will this have on the brightness of the lamp? Explain your answer.

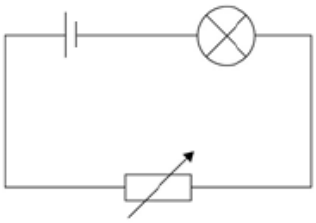

4. Which arrangement has a resistance of 10 Ω?

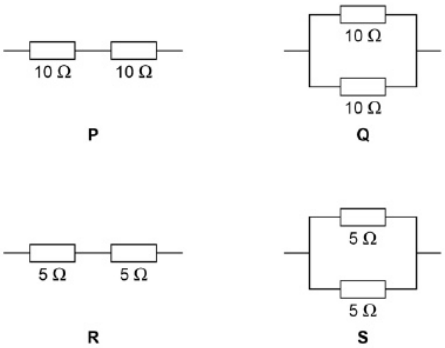

5. The circuits contain identical lamps. In which circuit will the lamp be brighter? Explain your answer.

A

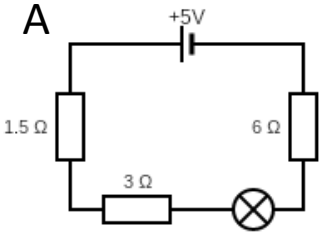

B

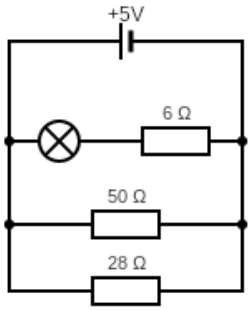

Assessment B: Resistance in series and parallel

Calculate the resistance of each circuit

A

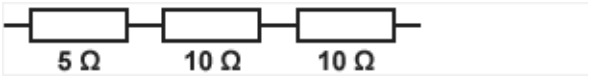

B

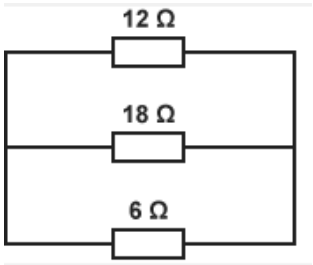

Objective C: Calculating using Ohm's law

If resistance remains constant, current and potential difference are directly proportional.

That means, if the potential difference doubles, the current also doubles.

This is called Ohm's law and can be written as the equation:

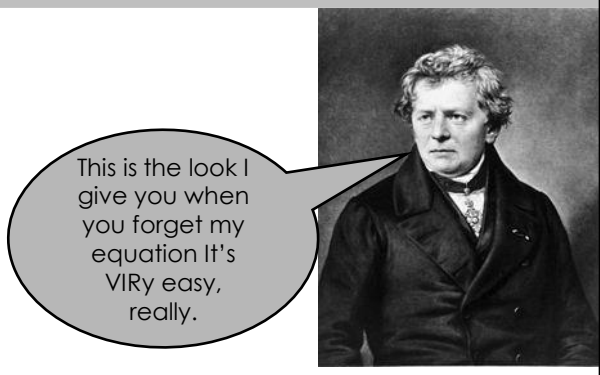

Potential difference = Current x Resistance

OR

V = IR

Worked example 1

Calculate the reading on the ammeter. Give your answer to 2 significant figures.

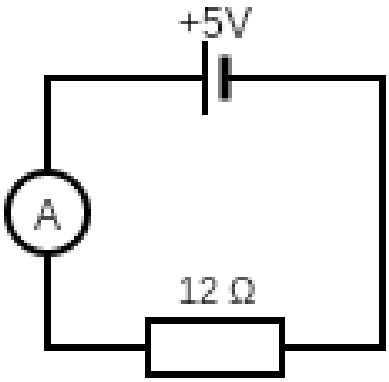

V = IR
5 = Ix12 ← substitute in values
I = 5/12 ← rearrange

I = 0.4166666.....
I = 0.42 A (2.s.f.) ← units and rounding

Study tip
Don't forget to give your answer the the correct number of significant figures or decimal places

Worked example 2

Calculate the readings on:
V1, V2, A1, A2 and the resistance of R1.

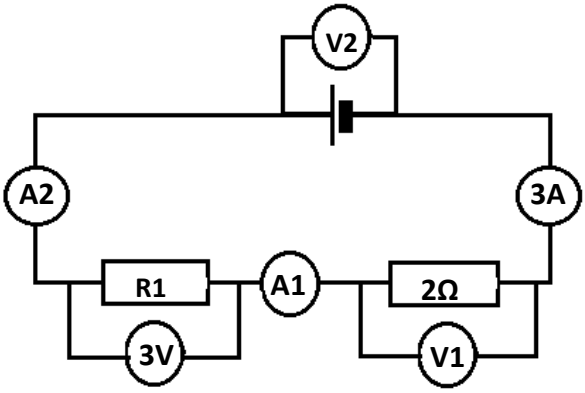

Ammeters
It is a series circuit, so the current is the same everywhere in the circuit.

A1 = A2 = A3

A1 = 3 A
A2 = 3 A

Resistor R1
V = IR
3 = 3 x R
R = 3/3
R = 1 Ω

Voltmeters
V1
V = IR
V = 3 x 2
V = 6 V

V2
It is a series circuit, so potential difference is shared between the components.

V2 = V1 + V3
V2 = 6 + 3
V2 = 9V

Study tip
You might be asked questions that require you to use your knowledge of circuits AND Ohm's law together.

Practice C: Calculating using Ohm's law

1. What is Ohm's law?

2. The potential difference of a circuit is halved. What happens to the current? Why?

3. Calculate the resistance of the diode. Give your answer to 3 significant figures.

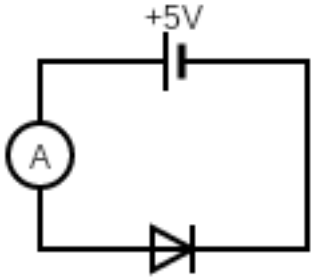

4. Calculate the values at each point specified.

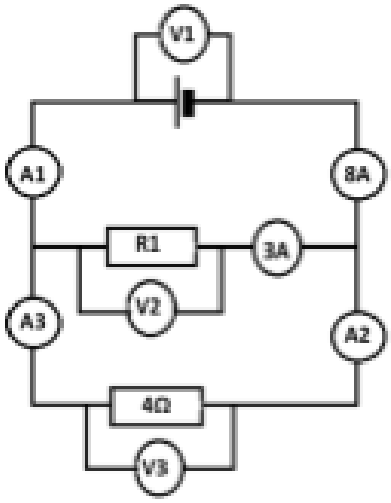

A1 = _____

A2 = _____

A3 = _____

V1 = _____

V2 = _____

R1 = _____

R2 = _____

5. Calculate the values at each point specified.

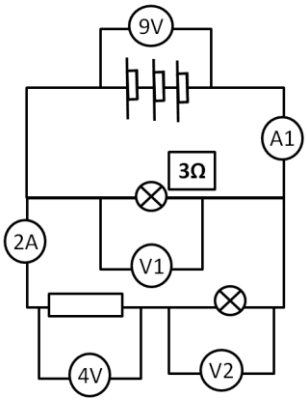

A1 = _____

V1 = _____

V2 = _____

Calculate the resistance of:

The bulb = _____

The resistor = _____

Assessment C: Calculating using Ohm's law

1. Calculate the values at each point specified.

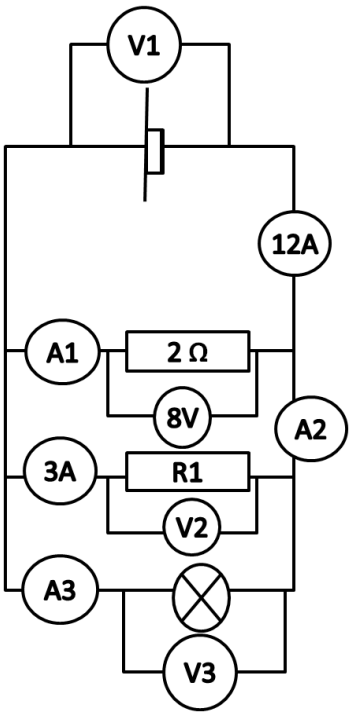

A1 = _____

A2 = _____

A3 = _____

V1 = _____

V2 = _____

V3 = _____

R1 = _____

Notes

5. You have the power!

Keywords: power, Watt, current, potential difference, resistance

Objectives this tutorial:

A) Calculating power using current and resistance
B) Calculating power using Ohm's law
C) Calculating energy from power

Starter:

What is the equation that links potential difference, current and power?

Objective A: Calculating power using current and resistance

There are two key equations that we have learnt so far.

Ohm's law states that:

Potential difference The amount of energy transferred by each Coulomb	=	**Current** The number of Coulombs that flow each second	X	**Resistance** How hard it is for charge to flow through a component

Power is related to current and potential difference using the equation:

Power The amount of energy transferred each second	=	**Current** The number of Coulombs that flow each second	X	**Potential difference** The amount of energy transferred by each Coulomb

There's one more equation to learn and we can work it out using these equations.

Practice A: Calculating power using current and resistance

1. What is potential difference in terms of current and resistance?

2. Substitute this into the equation for power (replace the 'V' in the power equation with your answer to question 1). You should have an equation that links power, current and resistance.

3. Use your equation to calculate the power in a circuit that has a current of 4 A and a resistance of 10 Ω

4. A hairdryer has a power of 220 W and runs off a 5 amp current. Calculate the resistance of the hairdryer.

5. A 900 W microwave has a resistance of 6 Ω. Calculate the current flowing through the microwave. Give your answer to three significant figures.

Assessment A: Calculate potential difference in series and parallel circuits

Which equation is incorrect?

A	$P = I^2R$
B	$R = V/I$
C	$V = I/P$
D	$I = \sqrt{(P/R)}$

Objective B: Calculating power using Ohm's law

These two equations are often used in conjunction with one another. You might be asked to calculate power, but only be provided with resistance and potential difference.

All you have to do is use one equation, followed by the other equation.

It's easy to spot these questions in a physics exam because they are usually worth between 4 and 6 marks!

It's easy money.

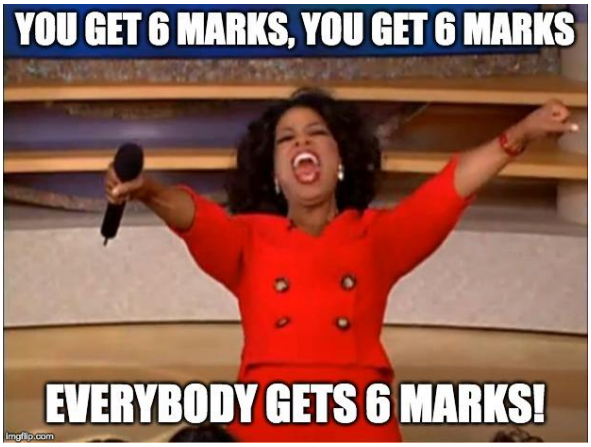

Worked example

The heating element of a 2.3 kW electric kettle takes a current from a 230 V mains electricity supply. Calculate the resistance of the heating element.

Step 1 – write down what you know and what you want to know

Power = 2.3 kW
Potential difference = 230 V
Resistance = ?

Step 2 - what equation links the information that you know?
P = IV

Step 3 – Calculate the first unknown
2.3 kW = 2300 W ← convert your units

2300 W = I x 230 V ← substitute in values
I = 2300 W/ 230 V ← rearrange
I = 10 A ← units

Step 4 – what equation can you now use to find your unknown?
V = IR
OR
$P = I^2R$

Step 5 – calculate the unknown value
V = IR

230 V = 10 x R ← substitute in values
R = 230 V/10 A ← rearrange
R = 23 Ω ← units

Practice B: Calculating power using Ohm's law

1. Calculate the resistance of a 12 V car headlamp of power 36 W

2. A heater has a resistance of 17 Ω and is used on a 230 V mains supply. Find the power to two significant figures.

3. An iron is rated at 3.5 A, 750 W. What power would be supplied to it if the current was increased to 4.5 A? Assume that the resistance of the iron is constant.

4. The battery powers 4 motors in the drone. Each motor has a resistance of 1.60 Ω when the power input to each motor is 19.6 W. The 4 motors are connected in parallel with the battery.
Calculate the current through the battery.

5. The charge that flows through lawnmower in 8.5 minutes seconds is 16 320 C. It has a power of 18.3 kW. Calculate the resistance of the heating element in the new shower.
Give your answer to three significant figures.
Write down any equations you use.

Assessment B: Calculating power using Ohm's law

You are provided with charge, time and potential difference. Which equations would you use to calculate power?

A	$V = IR$ and $P = I^2R$
B	$I = Q/t$ and $P = I^2R$
C	$I = Q/t$ and $P = IV$
D	$I = Q/t$, $R = V/I$ and $P = I^2R$

Objective C: Calculating energy from power

One more equation to learn. We already know that power is the amount of energy transferred each second.

We can write this mathematically by saying:

Power (W) = Energy transferred (J) / Time (s)

OR

P = E/t

Worked example
An electric heater draws a current of 8 amps (A) when plugged into the 230 V mains electricity supply. How much energy is transferred in 20 minutes? Give your answer in KJ.

Step 1 – write down what you know and want to know
I = 8 A
V = 230 V
T = 20 x 60 = 1200 s ← convert your units

E = ?

Step 2 - what equation links the information that you know?
P = IV

Step 3 – Calculate the first unknown
P = 8 A x 230 V ← substitute in values

P = 1840 W ← units

Step 4 – what equation can you now use to find your unknown?
P = E/t

Step 5 – calculate the unknown value
1840 W = E/1200 s

E = 1840 W x 1200 s ← rearrange

E = 2,208,000 J
E = 2208 KJ ← units

Practice C: Calculating energy from power

1. Calculate the energy transferred by a 1.5 W torch over its lifetime of 30 hours

2. A 6 V battery passes a current of 0.3 A through a torch bulb for 5 minutes. How much energy is transferred from the cell? Give your answer in KJ.

3. An electric light bulb is labelled 100 W and is designed to be used with a p.d. of 230 V. What current flows in it, and how much energy is transferred in 1 hour?

4. The battery in the drone can store 97.5 kJ of energy.
   When the drone is hovering, the power output of the battery is 65.0 W
   Calculate the time for which the drone can hover.

5. (EXTRA MEATY) An immersion heater has a resistance of 17 Ω and is used on a 230 V mains supply.
How long would it take to raise the temperature of 50 kg of water from 14 °C to 58 °C?

Assume that the specific heat capacity of water is 4200 J kg^{-1} K^{-1}.

Energy (J) = mass (kg) x specific heat capacity x temperature change (°C)

Assessment C: Calculating energy from power

Instead of Watts, what units should power actually be measured in?

A	J/s
B	Js
C	s/J
D	J/t

Notes

6. Final assessment

7. Feedback

What is the Purpose of Tutorial 7?

- To receive feedback on final assessments.
- To share examples of best practice with the other pupils in your group.
- To write targets for improvement in school lessons.
- To reflect on the programme including what was enjoyed and what was challenging.

Final assessment feedback

What I did well…	What I could have improved on…
•	•
•	•
•	•

My target for future work is…

Reflecting on Uni Pathways 2

What did you most enjoy about Uni Pathways?
•   •   •

What did you find challenging about the programme?	How did you overcome these challenges?
• • •	• • •

Notes

Notes

Notes

Notes

Notes

UNI PATHWAYS

Current events

Key Stage 4 Programme

researchersinschools.org