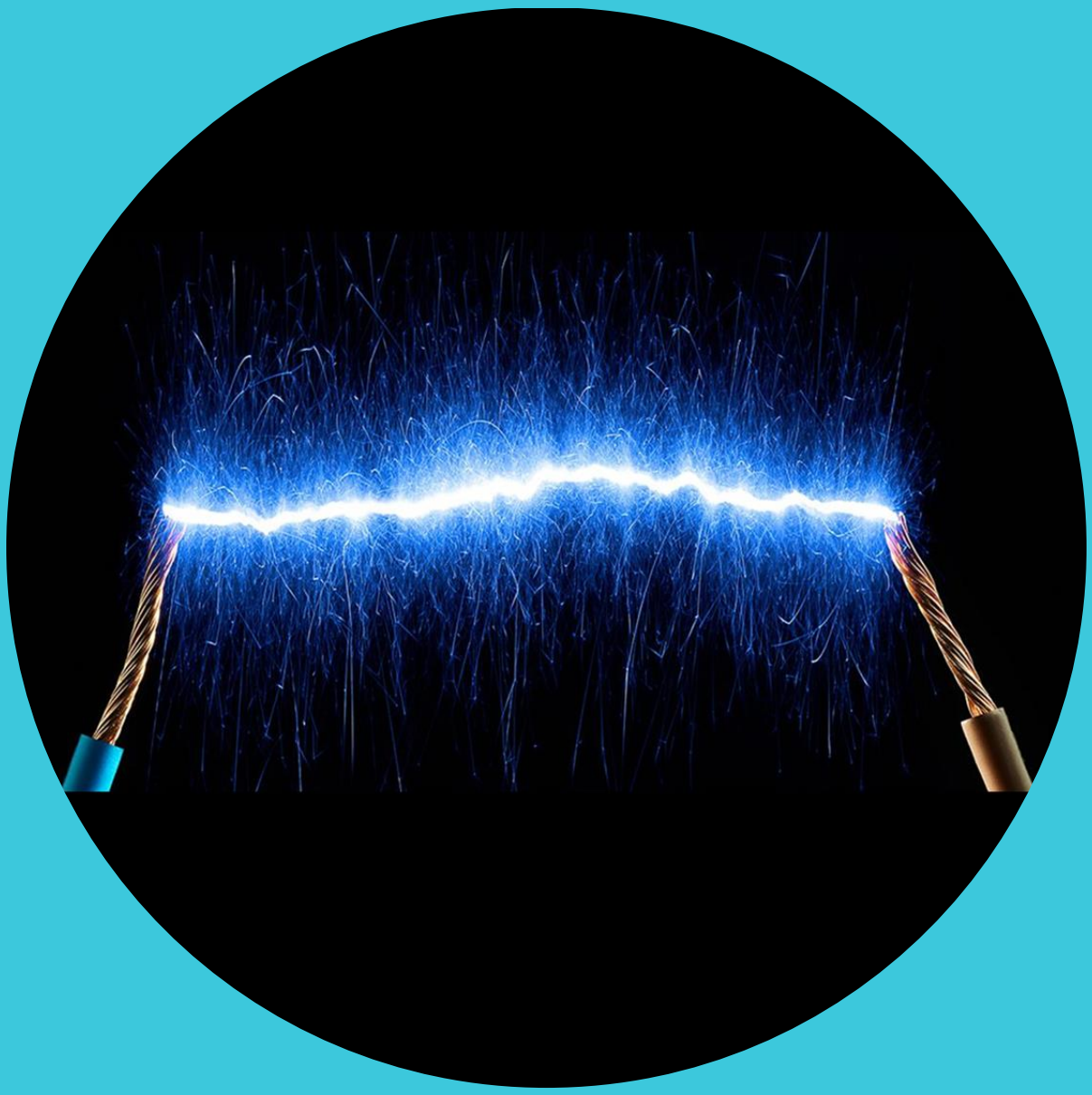

Electricity

Key Stage 4 Revision Programme

Pupil Name	
Handbook Designed by	Divakaran Murugesapillai, PhD

Timetable and Assignment Submission

Timetable – Tutorials

Tutorial	Date	Time	Location
1 (Baseline assessment)			
2			
3			
4			
5			
6 (Final assessment)			
7 (Feedback)			

Timetable – Homework Assignments

Tutorial 1		
Tutorial 2		
Tutorial 3		
Tutorial 4		
Tutorial 5		

Contents

Course Rationale	4
Glossary of Keywords	5
Tutorial 1	6
Tutorial 2	11
Tutorial 3	17
Tutorial 4	31
Tutorial 6	41
Tutorial 7	43

Course Rationale

I had the opportunity to teach lessons on electricity to KS3 and KS4 pupils. What I learnt from my teachings is that the students over the years have accumulated misconceptions such that the battery runs out of charge and the bulb goes out, the current is how fast charges move. Some students think that current flows in both directions in a circuit. Pupils think that current is used up in the bulb. The concept of the conservation of current is absent in their approach. The reasons are because they cannot see with their eyes. Due to misconceptions, students are having difficulties in solving problems and thus interpreting the circuit diagrams becomes very difficult. The fact the students face so much difficulties is that these misconceptions are not tackled immediately.

Also, the transition from circuits diagrams to wiring was even harder for the students. During the tutorial you will have the opportunity to carry out practical work, rearranging equations such as V=IR, transferring knowledge gained in maths.

The lack of practice and not revisiting the problems in different settings lead pupils to a lack of confidence. You will be presented with models which are appropriately explained and directly demonstrated by experiments so that the misconceptions can be removed. This will be the goal of these tutorials.

In these tutorials, we will follow the AQA specifications. We will address the misconceptions by building our tutorials in increasing the difficulties of the problems to solve. The tutorials will be built such a way lot of practice are given before attempting GCSE exam styles questions.

You will have a baseline assessment and a final assessment, both having 30 min in duration. These assessments are geared to prepare you for GCSE exams.

Subject Vocabulary

Word	Definition	In a sentence
current		
potential difference		
resistance		
ohmic conductor		
filament lamp		
diodes		
thermistors		
LDRs		
series circuit		
Parallel circuit		

1. Electrical charge and current

Keywords: electric charge, current

Objectives this tutorial:

A) Defining charge
B) Calculate current
C) Calculate current, charge and time

Starter: The term lightning flash is used to describe the entire discharge. A typical lightning bolt may transfer 10^{20} electrons in a fraction of a second.

Can you estimate the magnitude of the current?
(Hint: Charge of an electron =1.6 x 10^{-19} C)

Objective A: Defining current

The size of the electric current is the rate of flow of electrical charge and it is defined by the equation

$$\text{charge flow} = \text{current} \times \text{time}$$

$$Q = I\,t$$

where:

- charge flow, Q, in coulombs, C
- current, I, in amperes, A (amp is acceptable for ampere)
- time, t, in seconds, s

Note: A current has the same value at any point in a single closed loop.

Practice A: Defining current

1) State the equation for current, defining the terms used.

2) Explain why the units for current are C/s.

3) Write a sentence defining current in words.

4) Inside the metal wire there are some negatively charged particles which are free to move about. What is the name given to these particles?

5) What do we mean that a current of 1 A is flowing though a wire. Explain in terms of charges and time.

6) Explain why there is current at all points in a circuit as soon as the circuit is complete.

Assessment A: Defining current

Which statement is incorrect?

A	The time taken for the charges to flow from one end of a wire to the other is equal to charge flow divided by current.
B	$Q = It$
C	A current of 5 A flows for 5 s through a lamp. 10 C of charge has moved through the lamp.
D	Charge has units of coulombs, time has units of seconds and current has units of amps.

Objective B: Calculating charge

Worked example 1

Values given, no rearranging

1. Time = 2 s. Current = 2 A. What is the charge?

t = 2 s
I = 2 A
Q = ?

Substitute in the values, and work out the answer

Q =I t
Q =2 x 2
Q = 4 C

Study tip
Write down what you know, and what you want to know.

Study tip
Do not forget the units.

Worked example 2

A current of 5 A flows for 20 seconds through a lamp. How much charge has moved?

I = 5 A
t = 20 s
Q = ?

Substitute in the values, and work out the answer

Q =I t
Q =5 x 20
Q = 100 C

Study tip
Write down what you know, and what you want to know.

Study tip
Do not forget the units.

Worked example 3

A current of 2 A flows through a motor every 2 minutes. [illegible] used?

I = 2 A
t = 2 minutes = 2 x 60 = 120 s
Q = ?

Substitute in the values, and work out the answer

Q =I t
Q =2 x 120
Q = 240 C

Practice B: Calculating charge

1) A current of 1.5 amps (A) flows through a simple electrical circuit. How many coulombs of charge flow a point in 60 seconds?

2) How much charge has moved if a current of 13 A flows for 10 s?

3) Calculate the charge which passes a point in a circuit with a current of 10 mA in 3 minutes.

Assessment B: Calculating charge

Each electron in a circuit carries a very small charge but there are many billions of electrons present. Many everyday currents for small household appliances will be measured in milliamps, mA: 1,000 mA = 1 A.

A current of 60 mA flows through a lamp for half an hour. Calculate the charge transferred.

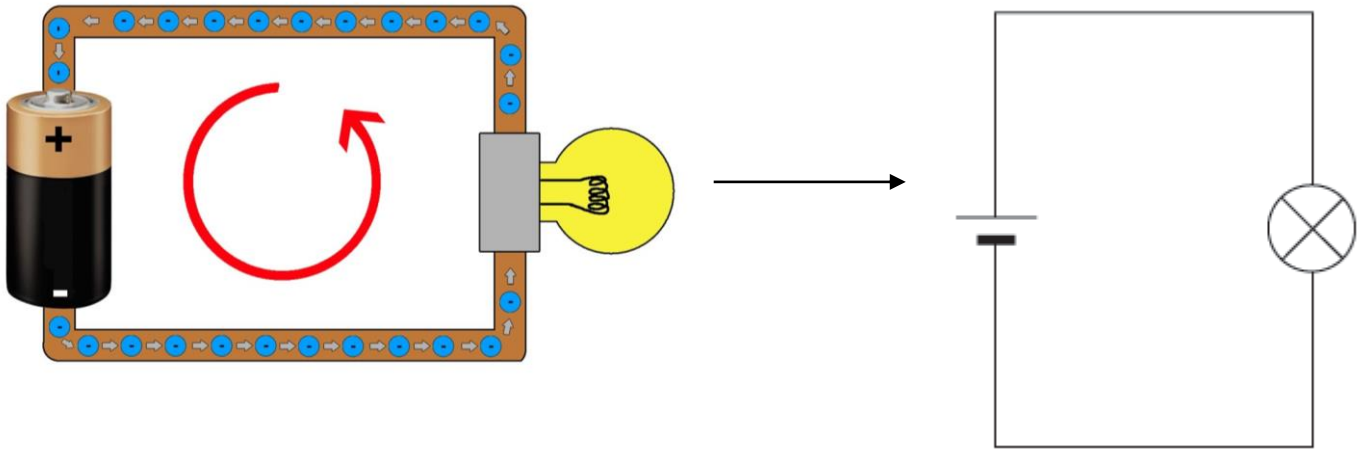

Objective C: Calculate current, charge and time

Worked example 1

How long would it take for 100 coulombs (C) of charge to flow through a motor if the current is 3000 milliamps (mA)?

Q = 100 C
I = 3000 mA = 3 A ← conversion
t = ?

Study tip
Identify the variables.

I = Q/t ← rearranging
t= Q/I

Study tip
Make current the subject of the equation.

t = 100 / 3
t = 33 s ← units

Worked example 2

A 150 coulombs of charge pass through an electric toothbrush in 100 seconds. What is the current?

Q = 150 C
t = 100 s
I = ?

I = Q/t ←
I = 150/100
I = 1.5 A

Study tip
Make current the subject of the equation.

Worked example 3

A radio can be recharged using a cell. The rechargeable radio uses a current of 1 amp (A). The cell has stored a charge of 200 coulombs (C). For how long can the radio be used?

I = 1 A
Q = 200 C
t = ?

I = Q/t ←
t = Q/I
t = 200/ 1
t = 200 s

Study tip
Make time the subject of the equation.

Practice C: Calculate current, charge and time

1) A flashbulb requires a current of 5 A. The flash lasts 0.02 s. How much charge flows through the bulb in this time?.

2) A rechargeable battery stores 7200 C of charge. For how long can it make a current of 4 A flow through a resistor?

3) What charge flows through a transistor if a current of 20 mA flows for ten minutes?

4) In a lightning bolt, a charge of 15 C flows and there is a current of 30,000 A. Calculate the duration of the lightning strike.

Assessment C: Calculating current

The graph below shows how the current through a filament lamp changes after the lamp is switched on.

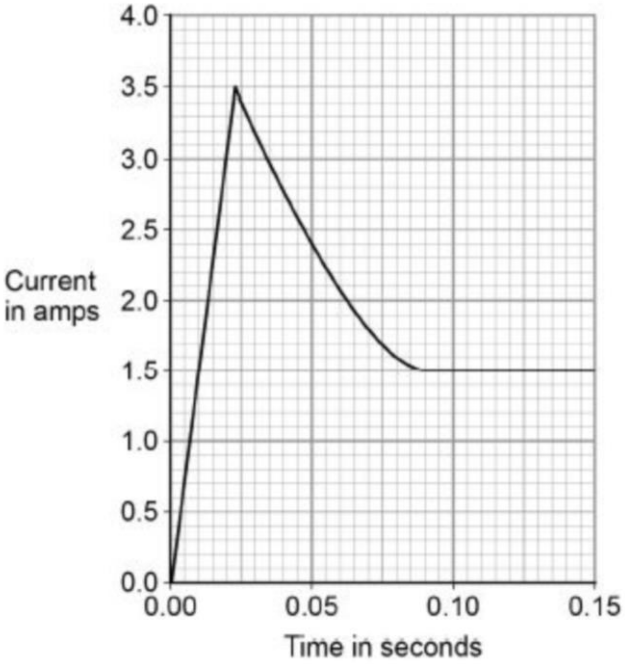

) The normal current through the filament lamp is 1.5 A.

For how many seconds is the current through the filament lamp greater than 1.5 A?

Tick **one** box.

- 0.01 s ☐
- 0.08 s ☐
- 0.09 s ☐
- 0.14 s ☐

Plenary: The photo shows two bulbs and cell connected in series. Draw a circuit diagram and write a paragraph about the direction of the flow of electrons and the conventional current in the context of this tutorial's objectives.

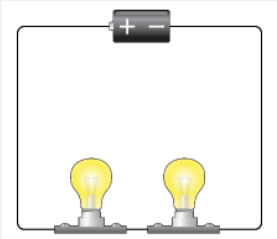

2. Current, resistance and potential difference

Keywords: current, potential difference, circuit diagrams

Objectives this tutorial:

A) Define Ohm's law
B) Calculate resistance, potential difference and current
C) Drawing and interpreting circuit diagrams

Starter: Birds like to sit on power lines. Should they stand on 1 foot or on 2? Explain your answer.

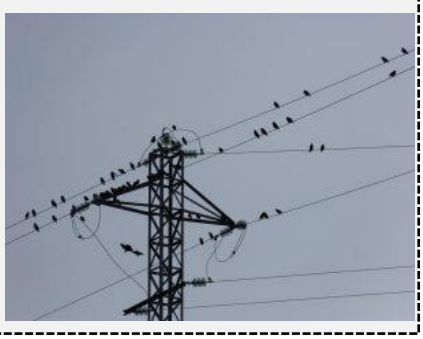

Objective A: Define Ohm's law

The current (I) through a component depends on both the resistance (R) of the component and the potential difference (V) across the component. The greater the resistance of the component the smaller the current for a given potential difference (pd) across the component. Current, potential difference or resistance can be calculated using the equation:

potential difference = current × resistance

$$V = I\,R$$

where:

- potential difference, *V*, in volts, V
- current, *I*, in amperes, A (amp is acceptable for ampere)
- resistance, *R*, in ohms, Ω
- Note: Potential difference is a measure of how much energy is transferred between two points in a circuit. One volt is the potential difference when one coulomb of charge transfers one joule of energy.

Practice A: Define Ohm's law

1) State the equation for potential difference (P.D.), defining the terms used.

2) Explain why the units for resistance are V/A.

3) Write a sentence defining resistance in words.

4) How much energy is transferred when 3 C of charge moves through a potential difference of 6 V?

5) What is the resistance of a component if 12 V causes a current of 2 A through it?

Assessment A: Defining current

Which statement is incorrect?

A	For a fixed resistor, the potential difference is directly proportional to the current.
B	Doubling the amount of energy into the resistor results in a current twice as fast running through the resistor.
C	A resistor is an **ohmic conductor**.
D	When a charge moves through a potential difference, electrical work is done and energy not transferred.

Objective B: Calculate resistance, potential difference and current

Worked example 1

Values given, no rearranging

1. I = 2 A, R = 100 **Ω**. Calculate V.

I = 2 A

R = 100Ω

V = ?

Substitute in the values, and work out the answer

V = I R

V = 2 x 100

V = 200 V

Study tip
Write down what you know, and what you want to know.

Study tip
Do not forget the units.

Worked example 2

I = 2 A, V = 24 V. Calculate R?

I = 2 A

V = 24 V

R = ?

Substitute in the values, and work out the answer

V = I R

R = V/I rearranging

R = 24/2

R = 12 Ω

Study tip
Write down what you know, and what you want to know.

Study tip
Do not forget the units.

Worked example 3

V = 48 V, R = 6 **Ω**. Calculate I.

V = 48 V

R = 6 Ω

I = ?

Substitute in the values, and work out the answer

V = I R

I = V/R

V = 48 V

R = 6 Ω

I = 48/6

I = 8 Ω

Practice B: Calculate resistance, potential difference and current

1) An electric kettle draws 10 A when connected to the mains voltage of 230 V. what is the kettle's resistance?

2) Calculate the current that will flow through a 2 kΩ resistor connected to a 12 V car battery.

3) An LED is connected to a 6 V battery. If a current of 10 mA is flowing, what is the resistance of the LED?

4) During the manufacture of aluminium a series of electrolysis cells have a potential difference of 4.5 V across them and draw a total current of 157 kA. What is the total resistance of the electrolysis cells?

5) It is estimated that a human body has a resistance of 100 kΩ. When struck by lightning around 30 kA flow through the body. Calculate the potential difference across the body from the lightning bolt.

Assessment B: Calculate resistance, potential difference and current

The lamp is now included in a circuit. The circuit is switched on for 2 minutes. During this time, 72 coulombs of charge pass through the lamp.

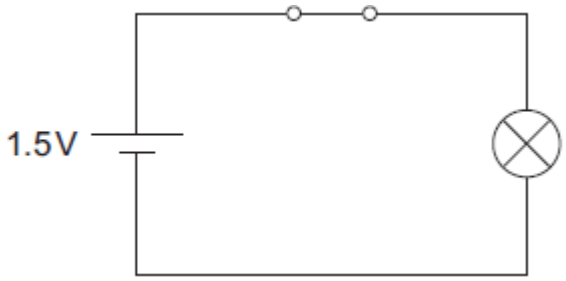

Use the equation in the box to calculate the energy transformed by the lamp while the circuit is switched on.

energy transformed = potential difference × charge

Show clearly how you work out your answer.

_____

_____

Energy transformed = _____ J

Objective C: Electrical components

Worked example 1

Circuit diagrams use standard symbols.

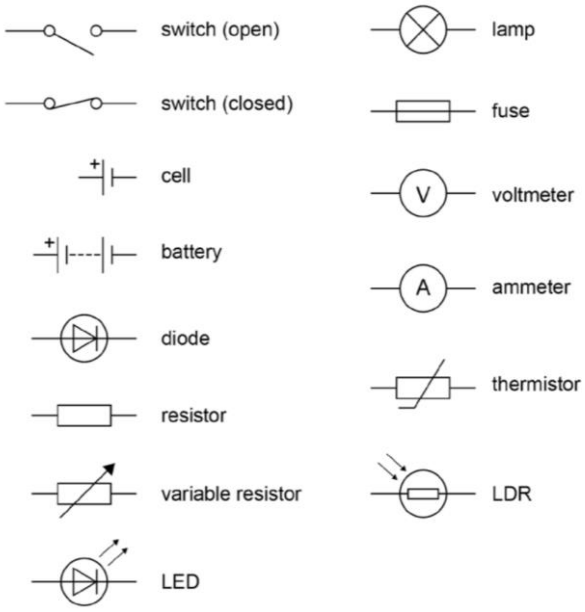

1. Use the correct symbols to draw circuit diagrams for the series and parallel circuits.

Series Circuit

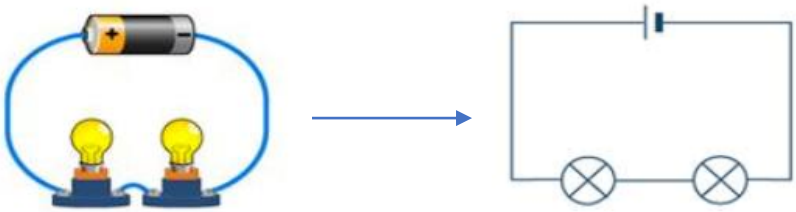

Parallel Circuit

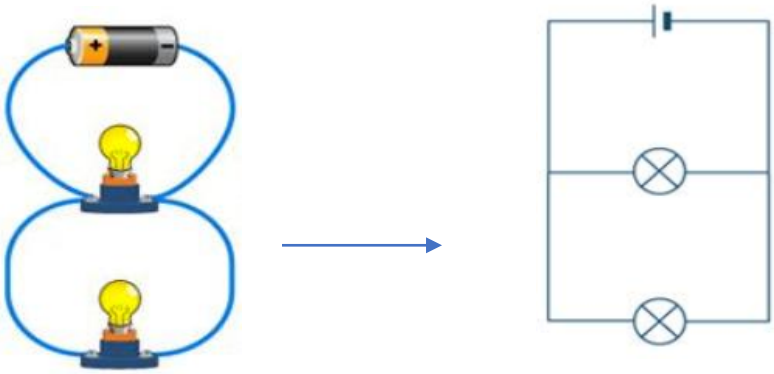

2. The drawing shows the circuit used to investigate how the current through a 5 ohm (Ω) resistor changes as the potential difference across the resistor changes. Draw, in the space below, a circuit diagram of this circuit. Use the correct symbols for each part of the circuit.

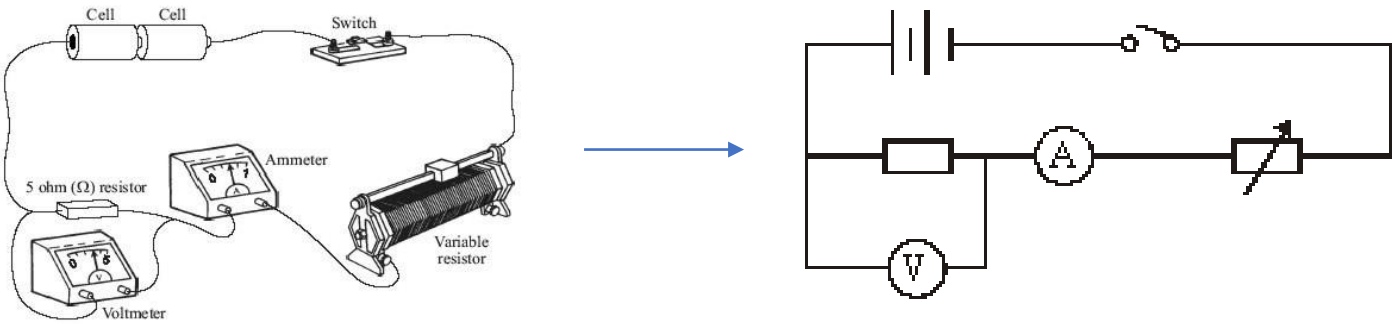

Practice C: Electrical components

(a) Draw **one** line from each circuit symbol to its correct name.

1.

Circuit symbol	Name
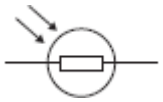	Diode
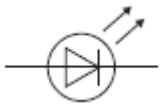	Light-dependent resistor (LDR)
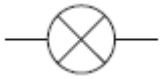	Lamp
	Light-emitting diode (LED)

2. The circuit contains two cells, an ammeter and a lamp. The reading on the ammeter is 0.2 A.

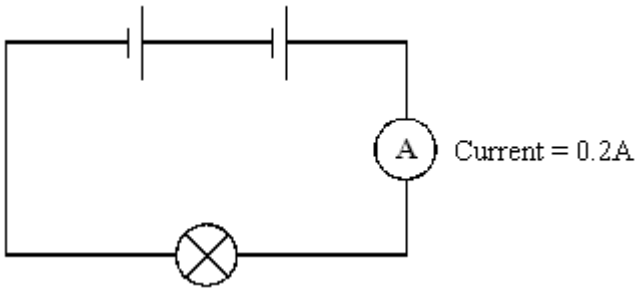

(a) What will be the reading on the ammeters in each of the circuits below?

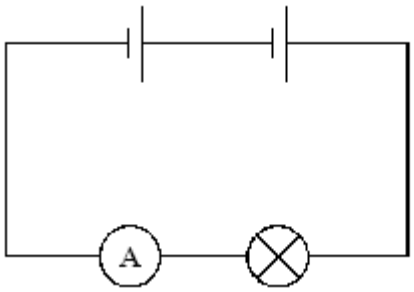

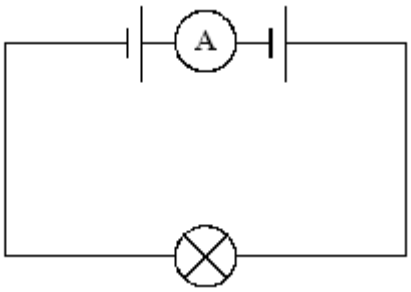

(i) Current is _____ A (ii) Current is _____ A

3.Draw a diagram to show how 1.5 V cells should be connected together to give a potential difference
of 4.5 V.

Use the correct circuit symbol for a cell.

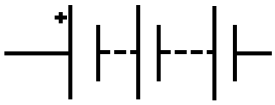

Assessment C: Electrical components

A student investigated how the resistance of a piece of nichrome wire varies with length.
Figure 1 shows part of the circuit the student used.

Figure 1

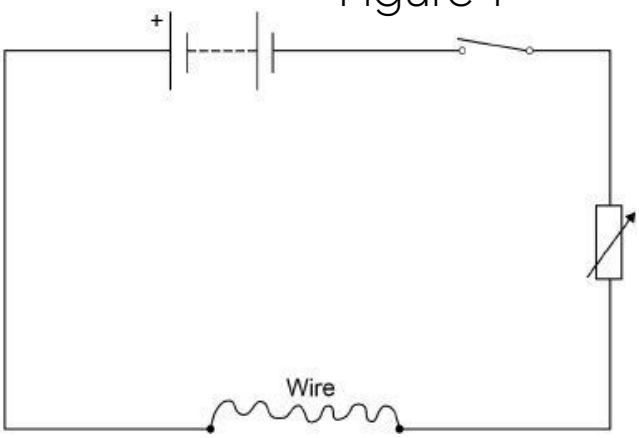

(a) Complete **Figure 1** by adding an ammeter and a voltmeter.
Use the correct circuit symbols.

(b) Describe how the student would obtain the data needed for the investigation.
Your answer should include a risk assessment for one hazard in the investigation.

_____

_____

_____

_____

_____

_____

_____

Plenary: An electrician is replacing an old electric shower with a new one. If the electrician touches the live wire he will receive an electric shock.
Explain why.

3. Resistors

Keywords: electric charge, current, resistors, potential difference, lamps, diodes, thermistors, LDRs, temperature

Objectives this tutorial:

A) Defining ohmic and non-ohmic conductor
B) I–V characteristics of a filament lamp, a diode and a resistor at constant temperature.
C) LDRs and thermistors

Starter: When an electric current flows through the filament, it heats the filament to a temperature of about 3000 °C, causing the filament to glow.
Can you estimate the temperature in kelvin of the filament lamp?
(Hint: 0 °C = 273 K)

Objective A: Defining ohmic and non-ohmic conductor

ohmic conductor

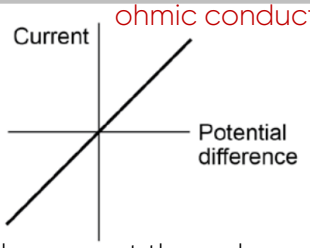

The current through an ohmic conductor (at a constant temperature) is directly proportional to the potential difference across the resistor. This means that the resistance remains constant as the current changes.

filament lamp

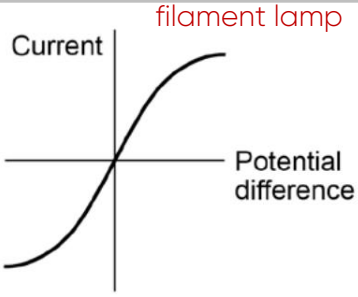

The resistance of a filament lamp increases as the temperature of the filament increases.

diode

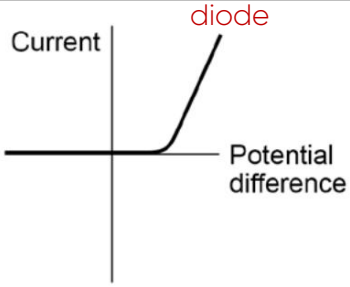

The current through a diode flows in one direction only. The diode has a
very high resistance in the reverse direction.

Note: The resistance of a thermistor decreases as the temperature increases.
The resistance of an LDR decreases as light intensity increases.

Practice A: Defining ohmic and non-ohmic conductor

1) What is a flow of charged particles called?.

2) What type of conductor is a fixed resistor?

3) A 2 Ω and a 3 Ω resistor in series give what total resistance?

4) What causes resistance?

5) Which term describes the relationship between resistance and the cross section of a wire?.

6) If a current of 10 amperes flows through a 230 volt lamp, what is its resistance?

Assessment A: Defining ohmic and non-ohmic conductor

Which statement is incorrect?

A	the ammeter must be connected in series with the component
B	The moving electrons can collide with the ions in the metal. This makes it more difficult for the current to flow, and causes resistance.
C	Ohm's law shows the relationship between potential difference, current and resistance
D	Current is measured using an voltmeter.

Objective B: I–V characteristics of a filament lamp, a diode and a resistor at constant temperature.

Worked example 1: diode

(a) A student set up the circuit shown in the diagram. The student uses the circuit to obtain the data needed to plot a current - potential difference graph for a diode.

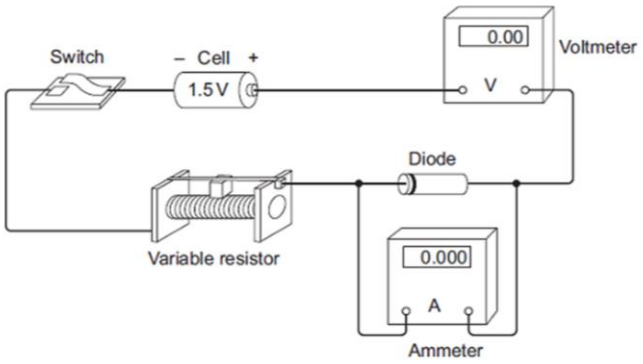

Study tip
Identify the type of circuit. Is it a series circuit or a parallel circuit?

Study tip
Identify each component in the circuit, and check whether it is correctly connected.

(i) Draw, in the boxes, the circuit symbol for a diode and the circuit symbol for a variable resistor.

(2)

Study tip: diode
A diode symbol has a triangle indicating the direction of the current and a vertical bar indicating current cannot go through.

Study tip: variable resistor
A resistor with an arrow indicating changes (variations).

(ii) The student made two mistakes when setting up the circuit.

What **two** mistakes did the student make?

1. Voltmeter is in series or voltmeter is not in parallel.
2. Ammeter is in parallel **or** ammeter is not in series

Study tip
Identify the mistakes and answer using appropriate terminologies: series and parallel.

(b) After correcting the circuit, the student obtained a set of data and plotted the graph below.

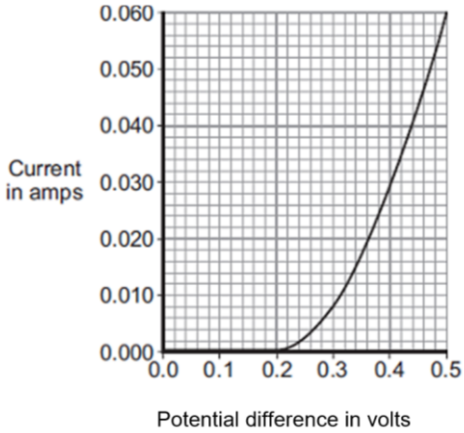

Study tip
Read the names of the variables on the y-axis and on the x-axis.

(i) At what potential difference did the diode start to conduct an electric current?

0.2 V

Study tip
Use the graph to identify the value.

(ii) Use data from the graph to calculate the resistance of the diode when the potential difference across the diode is 0.3 V.

I = 0.008 A

0.3 = 0.008 × R

Resistance = 37.5 ohms

Study tip
Use the graph to identify the value 0.3 V on the x-axis. Identify the corresponding y-value for current (0.008 A)

Study tip
Use Ohm's law to get the resistance.

Practice B: I–V characteristics of a filament lamp, a diode and a resistor at constant temperature.

1) a) Label the components in the diagram below:

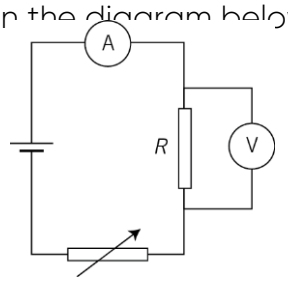

b) Describe how the circuit would be used to collect readings so that a current–potential difference graph could be plotted.

.....

.....

.....

.....

.....

c) The current–potential dif e relationship between the current and potential difference fo

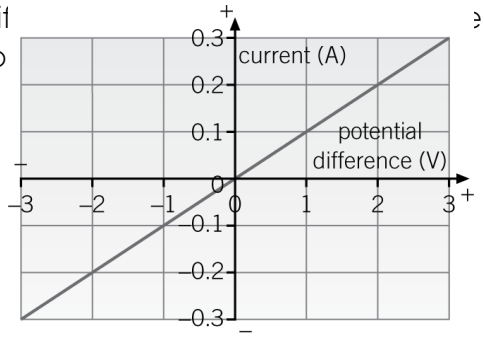

i) State the current flowing when the potential difference across the component is 2 V.

.....

ii) State the potential difference across the resistor when the current flowing through it is 0.3 A.

.....

.....

iii) Determine the resistance of the component.

Practice B: I–V characteristics of a filament lamp, a diode and a resistor at constant temperature.

2) a) A current–potential difference graph is plotted for a component. The graph is shown below:

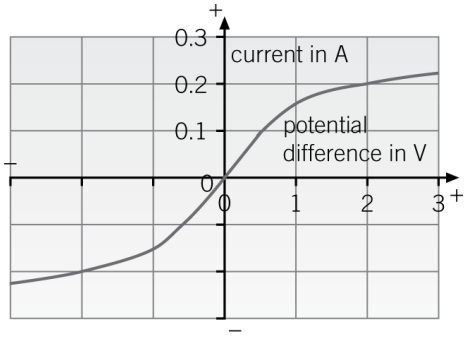

b) Identify the component for which this graph is the current–potential difference characteristic.

c) Explain why the graph has this shape..

.....

.....

.....

.....

.....

.....

3) a) Identify the component for which this is the current–potential difference characteristic..

.....

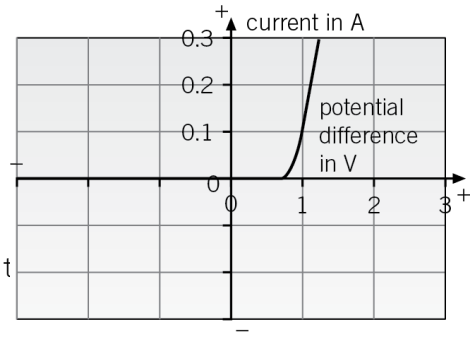

b) Explain why the graph has t

c) Calculate the resistance of the component when the potential difference across it is 1 V..

.....

.....

.....

.....

.....

Practice B: I–V characteristics of a filament lamp, a diode and a resistor at constant temperature.

d) i) Explain the significance of the negative values for p.d. and current?

.....

.....

.....

.....

ii) State the resistance of the component for negative values of p.d.

.....

iii) Describe a use for this component in a circuit.

.....

.....

.....

Assessment B: I–V characteristics of a filament lamp, a diode and a resistor at constant temperature.

A student wants to investigate how the current through a filament lamp affects its resistance.

(a) Use the circuit symbols in the boxes to draw a circuit diagram that she could use.

12 V battery	variable resistor	filament lamp	voltmeter	ammeter

(b) Describe how the student could use her circuit to investigate how the current through a filament lamp affects its resistance.

.....

.....

.....

.....

.....

(c) The student's results are shown in Figure 1.

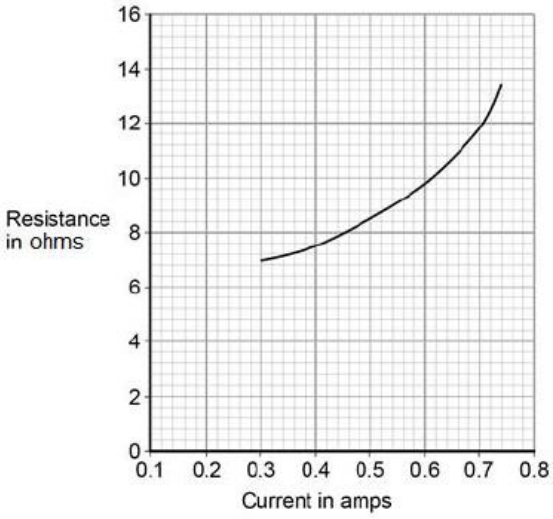

Figure 1

Describe how the resistance of the filament lamp changes as the current through it increases.

.....

.....

Objective C: LDRs and thermistors

.

Worked example 1: LDR

A student used the apparatus below to find out how the resistance of a light-dependent resistor (LDR) depends on light intensity.

Light-depending resistor (LDR): a resistor whose resistance depends on the intensity of the light incident on it

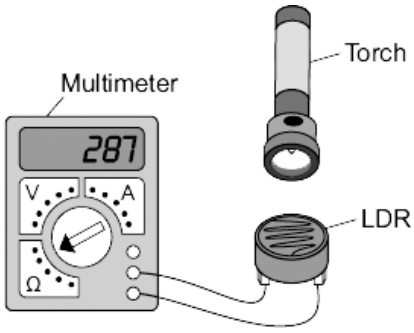

Study tip
Identify each apparatus and think about the function of each component.

The resistance of the LDR was measured directly using a multimeter.

(a) (i) Which one of the following is the correct circuit symbol for a LDR? Draw a ring around your answer.

Study tip
LDR is a resistor which depend on the incoming light. You need to look for a resistor symbol and incoming light (arrows in).

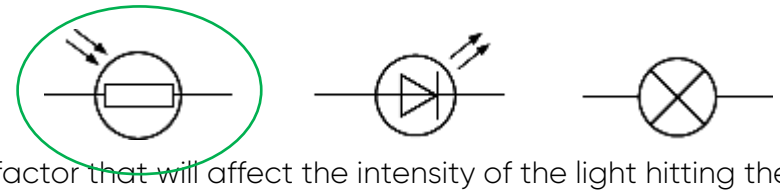

(ii) Name one factor that will affect the intensity of the light hitting the LDR.

torch on or off distance between torch and LDR

lights in room on or off shadow over the LDR

Study tip
Think about what may cause the LDR getting more light or less light.

(b) The manufacturer of the LDR provides data for the LDR in the form of a graph.

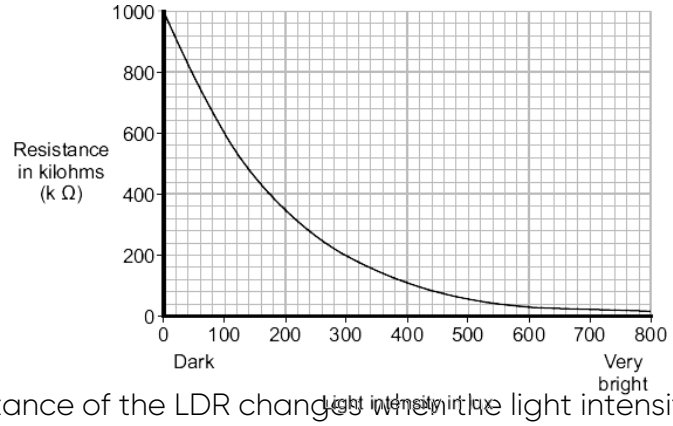

Study tip
Read the names of the variables on the y-axis and on the x-axis.

Describe how the resistance of the LDR changes when the light intensity increases from 100 lux to 300 lux.

resistance decreases

from 600 kΩ to 200 kΩ *accept by 400 kΩ*

Study tip
Look at the trend of the curve. Indicate the value of the resistance at 100 lux (600 kΩ) and 300 lux (200 kΩ).

Objective C: LDRs and thermistors

Worked example 2 : Thermistor

The diagram shows a temperature sensing circuit used to control a heating system in a house.

Thermistor: a resistor whose resistance depends on the temperature of the thermistor

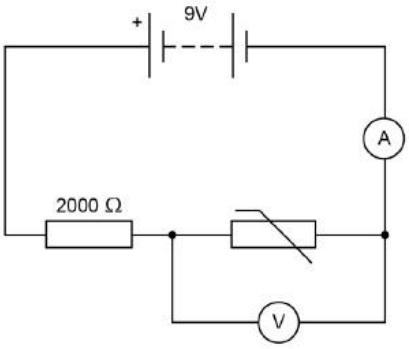

Study tip
Identify the type of circuit. Is it a series circuit or a parallel circuit?

Study tip
Identify each component in the circuit, and check whether it is correctly connected.

(a) What quantity does the ammeter measure?

The ammeter measures the current.

(b) The current in the circuit is 3.5 mA when the potential difference across the thermistor is 4.2 V Calculate the resistance of the thermistor.

Study tip
- Convert mA to A.
- Use Ohm's law V= IxR
- Rearrange the equation to get R.

3.5 mA = 3.5×10^{-3} A

V = I x R

$4.2 = 3.5 \times 10^{-3} \times R$

R = V/I

$R = 4.2 / 3.5 \times 10^{-3}$

Resistance = 1200 Ω

Practice C: LDRs and thermistors

1. a) Calculate the charge that flows through the thermistor in 5 minutes when the current is 3.5 mA.

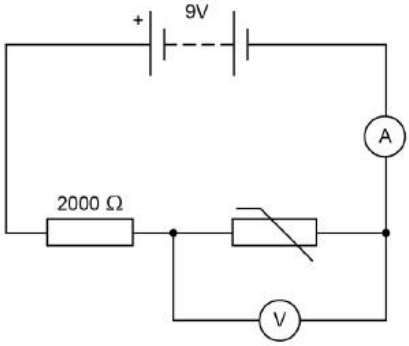

b) Explain why the potential difference across the thermistor changes as the temperature in the house decreases.

c) The circuit shown in the diagram can be modified to turn lights on and off by replacing the thermistor with a Light Dependent Resistor (LDR).

Draw the circuit symbol for an LDR in the space below.

2. The current-potential difference graphs of three components are shown below.
Use answers from the box to identify each component.

diode	**filament lamp**	**light dependent resistor**
resistor at constant temperature		**thermistor**

Figure 2

Graph A

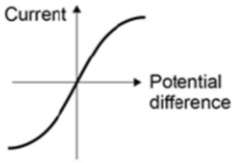

_____

Graph B

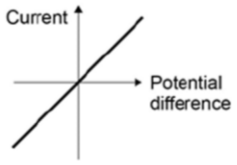

_____

Graph C

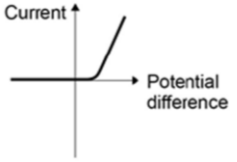

_____

3. (a) **Figure 1** shows the apparatus used to obtain the data needed to calculate the resistance of a thermistor at different temperatures.

Figure 1

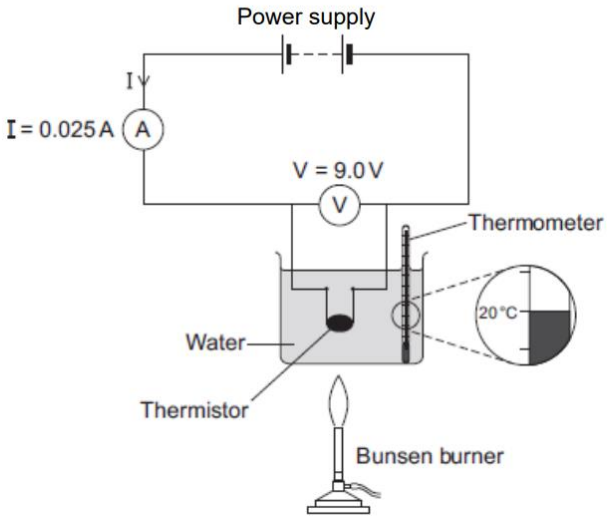

(i) In the box below, draw the circuit symbol for a thermistor.

(ii) Use the data given in **Figure 1** to calculate the resistance of the thermistor at 20 °C.

_____

_____

_____

Resistance = _____ ohms

(iii) **Figure 2** shows the axes for a sketch graph.

Complete **Figure 2** to show how the resistance of the thermistor will change as the temperature of the thermistor increases from 20 °C to 100 °C.

Figure 2

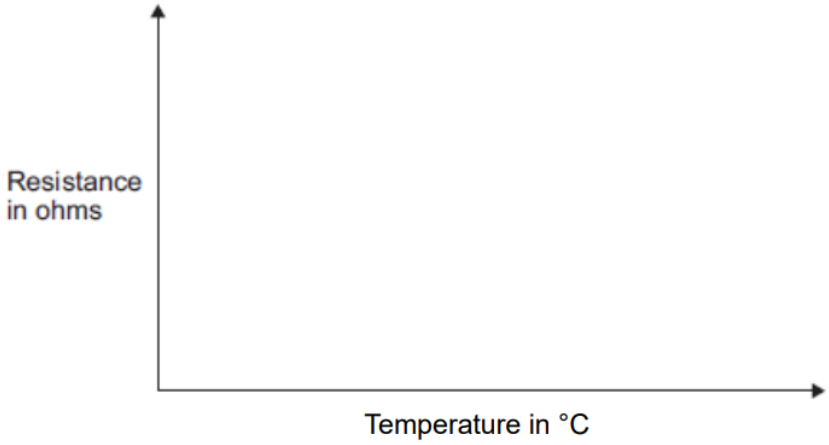

(iv) Which **one** of the following is most likely to include a thermistor?

Tick (✓) **one** box.

An automatic circuit to switch a plant watering system on and off. ☐

An automatic circuit to switch an outside light on when it gets dark. ☐

An automatic circuit to switch a heating system on and off. ☐

(b) The ammeter used in the circuit has a very low resistance.

Why is it important that ammeters have a very low resistance?

_____

_____

(c) The table below gives the temperature of boiling water using three different temperature scales.

Temperature	**Scale**
100	Celsius (°C)
212	Fahrenheit (°F)
80	Réaumur (°Re)

Scientists in different countries use the same temperature scale to measure temperature.

Suggest **one** advantage of doing this.

_____

_____

_____

(d) A student plans to investigate how the resistance of a light-dependent resistor (LDR) changes with light intensity.

The student starts with the apparatus shown in **Figure 2** but makes three changes to the apparatus.

One of the changes the student makes is to replace the thermistor with an LDR.

Describe what other changes the student should make to the apparatus.

_____

_____

_____

_____

4. **Figure 1** shows the apparatus used to investigate how the current through a thermistor depends on the temperature of the thermistor.

Figure 1

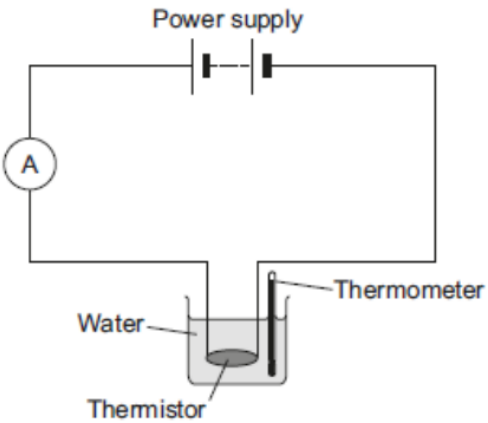

(a) Which **one** of the following is the correct circuit symbol for a thermistor?

Tick (✓) **one** box.

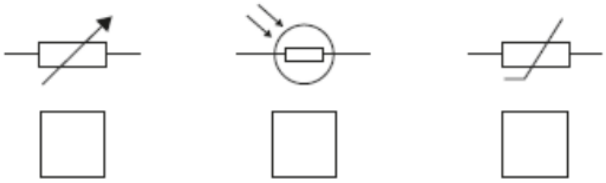

(b) To get a range of results, hot water at 60 °C was poured into the beaker.
The temperature of the water and current through the thermistor were then recorded as the water cooled.

The results of the investigation are shown in **Figure 2**.

Figure 2

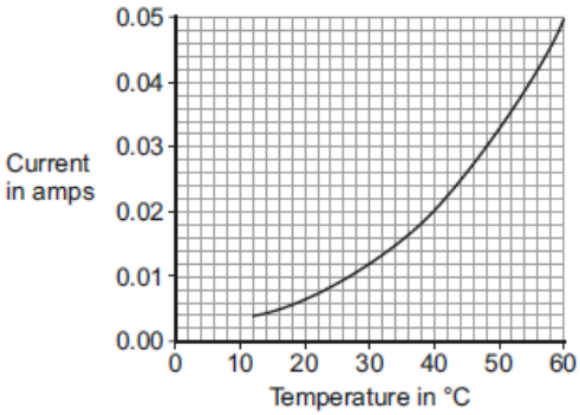

(i) Suggest **one** way the investigation could have been changed to give a wider range of temperatures.

_____

_____

(ii) Describe how the current through the thermistor depends on the temperature of the thermistor.

_____

_____

(iii) Use **Figure 2** to determine the current through the thermistor at 40 °C.

Current at 40 °C = _____ A

(iv) At 40 °C the thermistor has a resistance of 250 Ω.

Use your answer to part **(iii)** and the resistance of the thermistor to calculate the potential difference across the thermistor.

_____

_____

_____

_____

Potential difference = _____ V

(v) The potential difference across the thermistor stays the same all through the investigation.

What conclusion can be made from the results in **Figure 2** about the resistance of the thermistor as the temperature of the thermistor **decreases?**

Tick (✓) **one** box.

the resistance increases ☐

the resistance does not change ☐

the resistance decreases ☐

Assessment C: LDRs and thermistors

The diagram shows a simple light-sensing circuit.

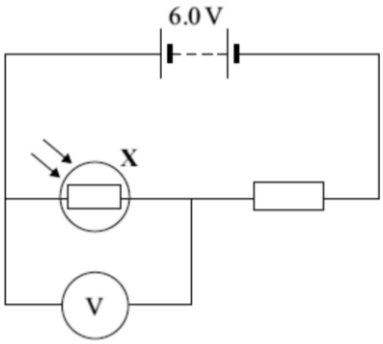

(a) The graph, supplied by the manufacturer, shows how the resistance of the component labelled **X** varies with light intensity.

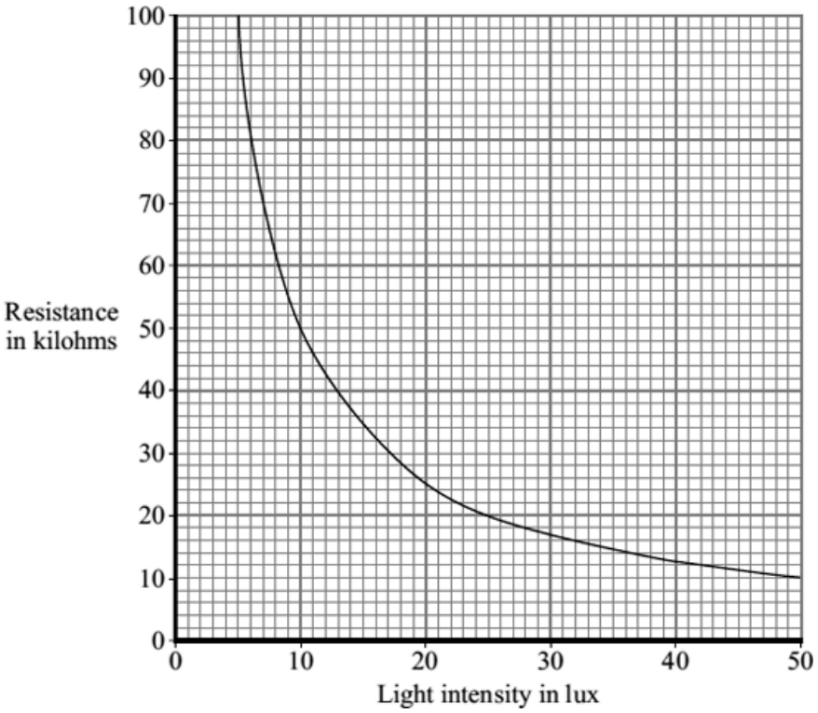

(i) What is component **X**?

_____

(ii) Use the graph to find the resistance of component **X** when the light intensity is 20 lux.

_____

(iii) When the light intensity is 20 lux, the current through the circuit is 0.0002 A.

Calculate the reading on the voltmeter when the light intensity is 20 lux.

Show clearly how you work out your answer.

_____

_____

Voltmeter reading =_____ volts

Plenary: A resistor is a component that is used in an electric circuit. Describe how a student would use the circuit to take the readings necessary to determine the resistance of resistor R.

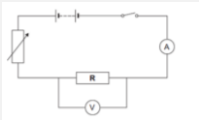

4. Series and parallel circuits

Keywords: total resistance, total potential difference, total current

Objectives this tutorial:

A) Defining total resistance
B) Defining total potential difference
C) Defining total current

Starter: The plug of an electrical appliance contains a fuse. What the correct symbol for fuse? Tick **one** box. Explain what other symbols represent.

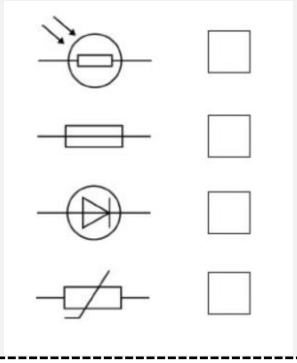

Objective A: Defining total resistance

For components connected in **series**:
The **total resistance** of two components is the sum of the resistance of each comp
$R_{total} = R_1 + R_2$
resistance, R, in ohms, **Ω**

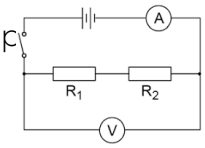

For components connected in **parallel**:
The **total resistance** of two resistors is less than the resistance of the smallest individual resistor

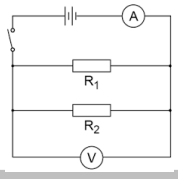

Practice A: Defining total resistance

1 Describe the arrangements below. In each case, name the components and state how they are arranged in the circuit, using the terms 'series' and 'parallel'.

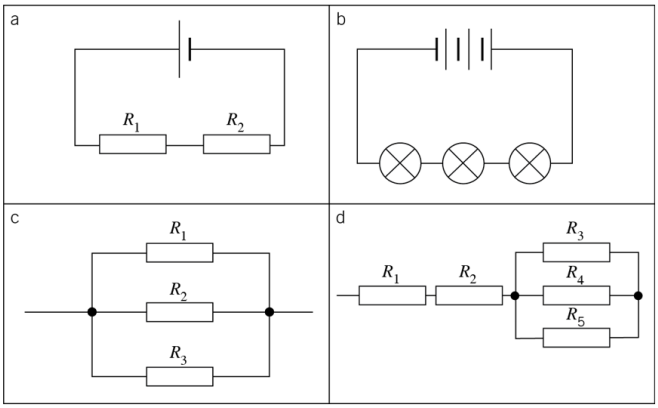

a .....

b .....

.....

c .....

d .....

.....

2 Calculate the size of the effective resistance in each of the examples:

a

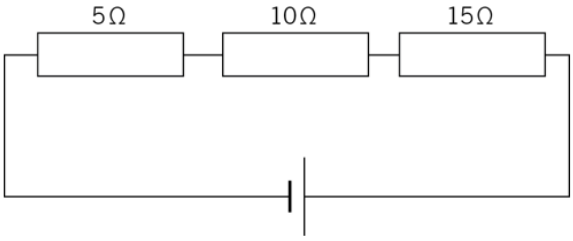

.....

.....

b

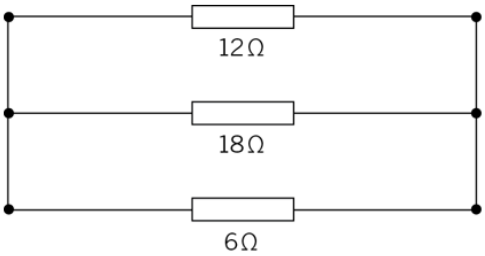

.....

.....

.....

c

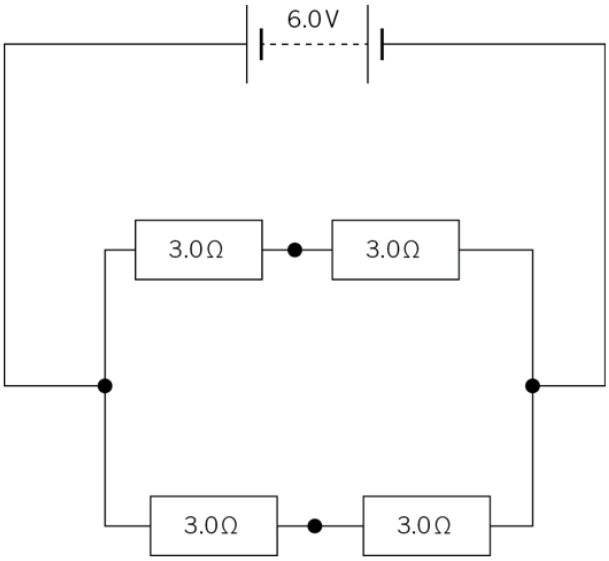

.....

.....

.....

3 Calculate the size of the current flowing in each of the resistors below.

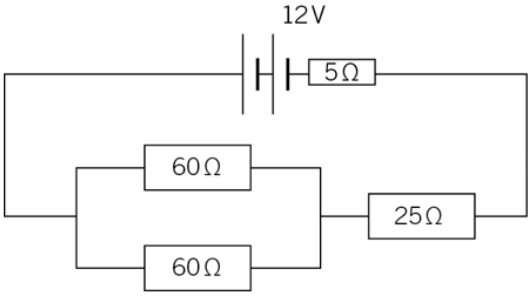

.....

.....

.....

.....

4 A filament lamp is placed in parallel with a resistor of 150 Ω as shown in the circuit below and then connected to a cell of potential difference 12 V. The current leaving the cell is 0.1 A.

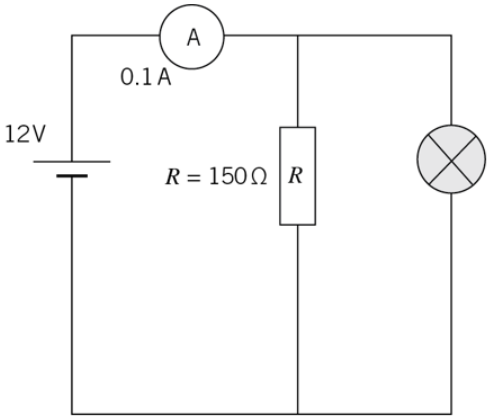

Calculate the resistance of the filament lamp.

.....

.....

.....

.....

.....

5. Each of the three bulbs shown in the circuit has a resistance of 20 Ω. The cell has a potential difference of 12 V.

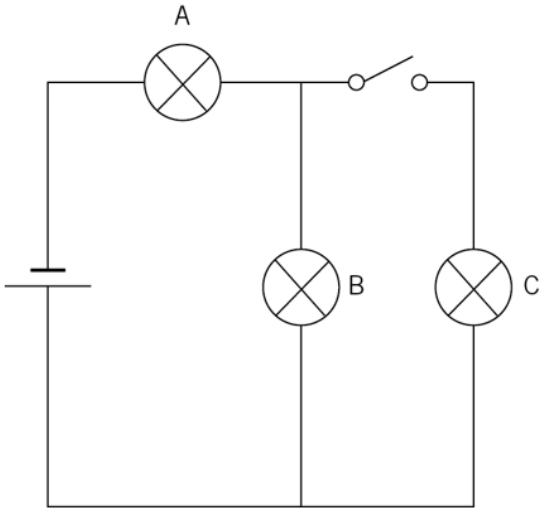

a Calculate the total effective resistance of the circuit.

.....

.....

b Calculate the current through each of the bulbs A, B and C.

.....

.....

.....

.....

.....

c Determine what will happen to the size of the current leaving the cell if the switch is opened.

.....

.....

.....

.....

Objective B: Defining total potential difference

For components connected in **series**:
The total **potential difference** of the power supply is shared between the components.

For components connected in **parallel**:
The potential difference across each component is the same.

Practice B: Defining total potential difference

1 Define 'series circuit'.

..... (*1 mark*)

2 Write down rules for:

a current in a series circuit

..... (*1 mark*)

b potential differences in a series circuit.

.....

..... (*1 mark*)

3 **a** Calculate the potential difference across the battery (made up of two 1.5 V cells in series) in the circuit below.

..... (*1 mark*)

b The potential difference across resistor P is 0.9 V. Calculate the potential difference across resistor Q.

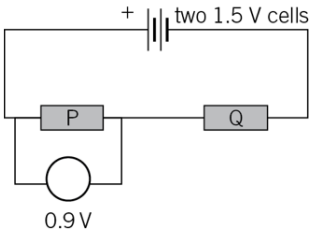

.....

..... (*2 marks*)

4 Calculate the potential difference across the cell in the circuit below.

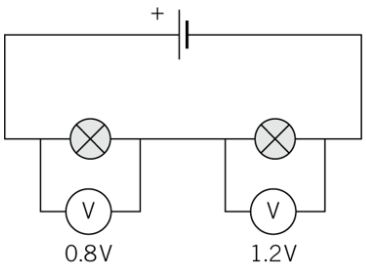

.....

..... (*2 marks*)

5 Explain the difference between current and potential difference.

.....

.....

..... (*2 marks*)

Assessment B: Defining total potential difference

The resistors in the circuits are identical.

Each of the cells has a potential difference of 1.5 volts.

Figure 1

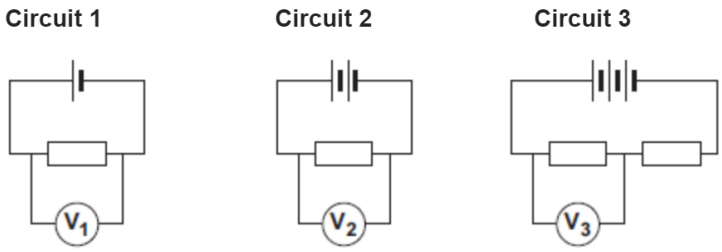

(i) Use the correct answer from the box to complete the sentence.

half	**twice**	**the same as**

The resistance of **circuit 1** is _____ the resistance of **circuit 3**.

(1)

(ii) Calculate the reading on voltmeter $\mathbf{V_2}$.

_____

Voltmeter reading $\mathbf{V_2}$ = _____ V

(1)

(iii) Which voltmeter, $\mathbf{V_1}$, $\mathbf{V_2}$ or $\mathbf{V_3}$, will give the lowest reading?

Draw a ring around the correct answer.

$\mathbf{V_1}$ $\mathbf{V_2}$ $\mathbf{V_3}$

Objective B: Defining total current

For components connected in **series**:
There is the **same current** through each component

For components connected in **parallel**:
The total current through the whole circuit is the sum of the currents through the separate components

Practice B: Defining total current

1) Look at the circuit diagram and complete the calculations.

Total resistance in circuit = ____ Ω

Current at A_1 = _____ A

Voltage across V_1 = __ V

Voltage across V_2 = __ V

Voltage across V_3 = __ V

If 6 V battery is replaced with 12 V battery, current at A_1 = _____ A

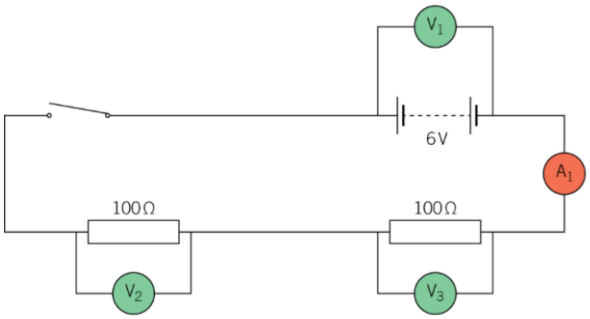

2)

incorrect (actual current = 0.5 A)

correct (current = 1.5 A)

incorrect (actual current = 1.0 A)

correct (current = 0.75 A)

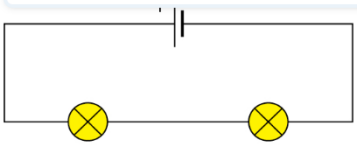

cell = 12 V
resistance of each bulb = 12 Ω
current = 1 A

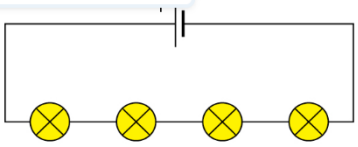

cell = 6 V
resistance of each bulb = 2 Ω
current = 0.75 A

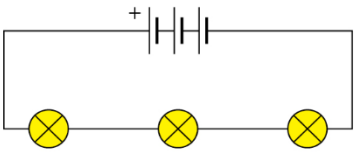

cell = 4 V
resistance of each bulb = 4 Ω
current = 4 A

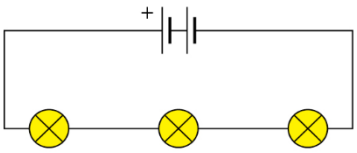

cell = 18 V

3. A Light Dependent Resistor (LDR) is used to turn on an outside lamp when it gets dark.

Part of the circuit is shown in **Figure 2**.

Figure 2

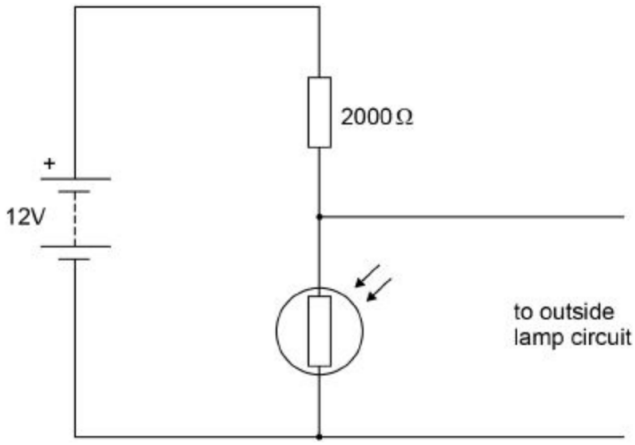

(d) The light intensity decreases.

What happens to the potential difference across the LDR and the current in the LDR?

Potential difference _____

Current _____

(e) What is the resistance of the LDR when the potential difference across it is 4 V?

Give a reason for your answer.

Explain your answer.

Resistance = _____ Ω

(f) Calculate the current through the LDR when the resistance of the LDR is 5000 Ω.

Give your answer to 2 significant figures.

_____

_____

_____

_____

Current = _____ A

Assessment C: Defining total current

Part 1: Series and parallel circuits

1 Complete these sentences about *current* in series and parallel circuits by deleting the incorrect words:

a The current in one part of a series circuit **adds up to/equals** the current in other parts of the circuit. (*1 mark*)

b If each loop of a parallel circuit has the *same* component in it the current in each loop is **different/the same**. (*1 mark*)

c If each loop of a parallel circuit has a *different* component in it the current in each loop is **different/the same**. (*1 mark*)

d In a parallel circuit the current in each loop **adds up to/equals** the current near the battery. (*1 mark*)

Plenary: Draw the circuit diagram that solves each problem.

I want to make a torch which can be switched on or off and has one bright bulb.	I am wiring the lights in my daughters' room. I'd like them to be able to turn their lights on and off individually but I want my own switch that turns them both off.
I want to have a pair of lights in my bedroom that turn on together. I need them both to be bright and I don't want both going off if one bulb breaks.	I want to have a room with three lights. I want to be able to turn two of the lights on and off together, and turn the third light on and off separately.

Tutorial 7 - Feedback

What is the Purpose of Tutorial 7?

- To receive feedback on final assessments.
- To share examples of best practice with the other pupils in your group.
- To write targets for improvement in school lessons.
- To reflect on the programme including what was enjoyed and what was challenging.

Final assessment feedback

What I did well…	What I could have improved on…
•	•
•	•
•	•

My target for future work is…

Reflecting on Uni Pathways

What did you most enjoy about Uni Pathways?
• • •

What did you find challenging about the programme?	How did you overcome these challenges?
• • •	• • •

Notes

Notes

Notes

Electricity

Key Stage 4 Programme

researchersinschools.org