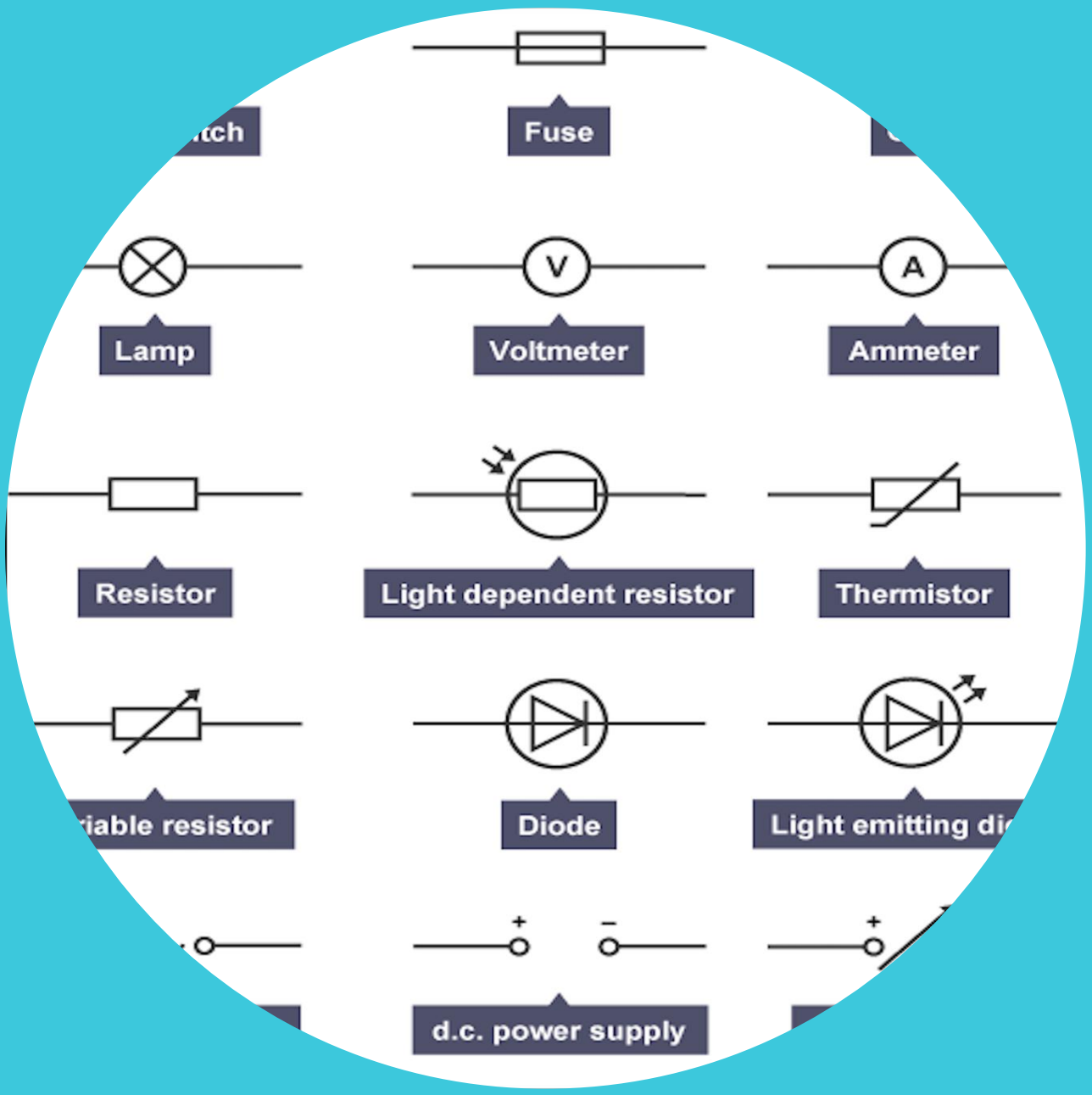

Electrical circuits

Key Stage 4 Revision Programme

Pupil Name

Handbook Designed by G.W. Angus, Ph.D

Timetable and Assignment Submission

Timetable – Tutorials

Tutorial	Date	Time	Location
1 (Baseline)			
2			
3			
4			
5			
6 (Final Assignment)			
7 (Feedback)			

Timetable – Homework Assignments

Tutorial 1		
Tutorial 2		
Tutorial 3		
Tutorial 4		
Tutorial 5		

Contents

Course Rationale **P4**

Glossary of Keywords **P5**

Tutorial 1/Baseline Assessment **P6**

Tutorial 2 - Charge, current & resistance **P7**

Objective A - To define charge **P7**

Objective B - To define current and use I=Q/t **P10**

Objective C - To define and describe resistance **P12**

Tutorial 3 - Potential difference, circuits and components **P14**

Objective A - To define potential difference **P14**

Objective B - To define the purpose of components **P17**

Tutorial 4 - Ohm's law and IV characteristics **P20**

Objective A - To define and use Ohm's law **P20**

Objective B - To describe and interpret IV characteristics **P23**

Objective C - To use graphs to analyse components **P27**

Tutorial 5 - Series and parallel circuits **P32**

Objective A - To master series circuits **P32**

Objective B - Current and p.d. in parallel circuits **P38**

Objective C - Resistance in parallel circuits **P42**

Tutorial 6/Final Assessment **P45**

Tutorial 7/ Feedback tutorial **P46**

Reflection on feedback **P47**

Notes **P48**

Course Rationale

Electricity is a broad topic in physics. In this course we approach the learning of materials via dedicated practice. For you to accomplish mastery of the topics of the course, which include Ohm's Law, Series and Parallel Circuits, you will focus on three aspects of learning building and improving your current toolbox. The three aspects are:

Numeracy – Focus on numeracy deals with the declarative, procedural and conditional knowledge you must have when problem solving. What does this mean? Simply you will improve your working memory of equations (declarative), be confident in rearranging equations (procedural) and have a firm grasp on when to rearrange the equation to solve the problem.

Literacy – Focus on literacy deals with the ability to extract mathematical concepts from word problems and additionally be able to utilise scientific vocabulary to describe/explain concepts verbally and pictorially.

Practical – Focus on combining numeracy and literacy for use in interpreting data on a graph and being able to plot data correctly on a graph and extract that information to solve problems.

This course commences with a baseline assessment of a student's ability. From there we embark on four Tutorials with a particular structure. We begin by identifying the objective, then move to dedicated practice and finally assessing what was learnt.

To conclude the course students will take a final assessment that will be 30 minutes in length. This will build confidence in being able to alleviate exam stress and show how students improved. Finally students must be able to adequately discuss how the National Grid functions utilizing the knowledge learnt during this course.

Subject Vocabulary

Word	Definition	In a sentence
Charge	A measure of the number of charged particles and is measured in coulombs.	The charge decreased.
Current	The number of coulombs passing a point in 1 second.	The current increased when an extra cell was added.
potential difference	A potential difference of 1V across a component with a resistance of 1 ohm will cause a current of 1A to flow.	The potential difference in a parallel circuit is the same along each loop.
Resistance	The opposition to charge flow.	Conductors have low resistance and insulators have high resistance.
Series circuit	A circuit with one loop.	The series circuit has a thermistor and a diode in one big loop.
Parallel circuit	A circuit with more than one loop.	The parallel circuit had a resistor in one loop and a bulb in the second loop.
Component	Device that can be added to a circuit with a special property	The thermistor and LDR are types of sensors.

Baseline Assessment

What is the Purpose of Baseline Assessment?

- To introduce the topic of the course and the teacher
- To assess pupil level of knowledge and compare performance

Assessment – You have 30 minutes to complete this assessment.

Tutorial 2 – Charge, Current and Resistance

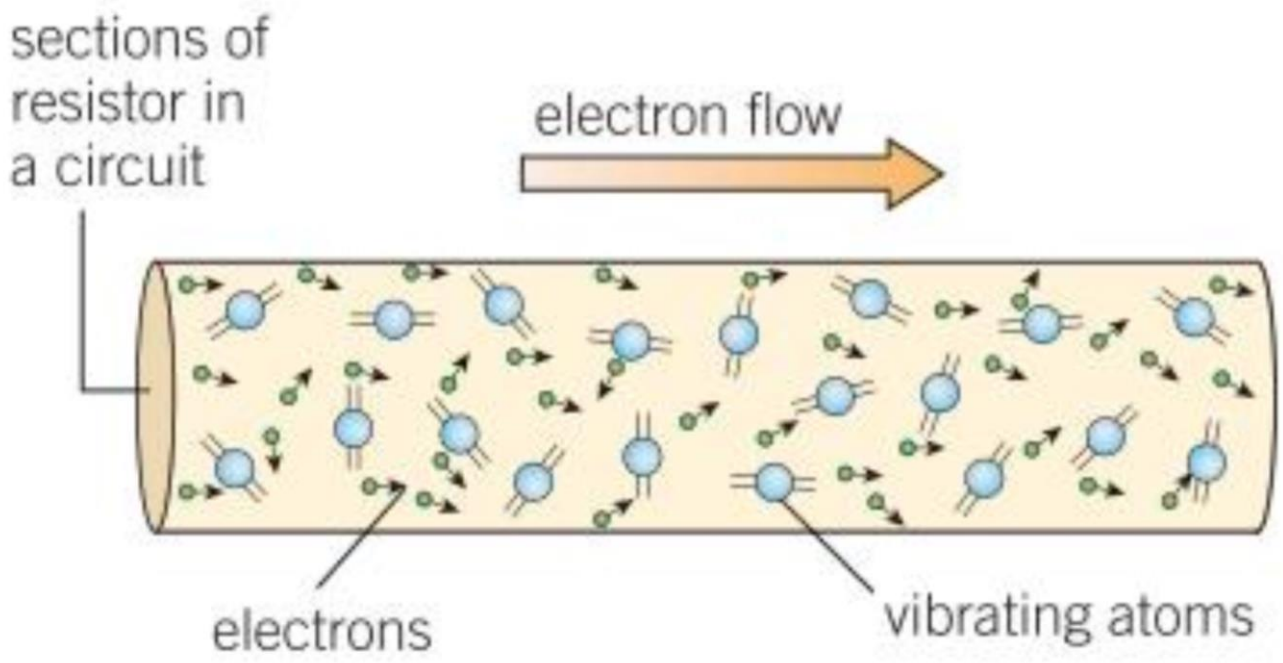

Objectives of Tutorial 2

A. To define charge, Q
B. To define current, I, and use I=Q/t
C. To define resistance, R

Objective A: To define charge

We know about charged particles like the *electron* and *proton*.

A **neutron** has *no* charge.

There are also charged particles like the *alpha particle* (a type of ionising radiation), which is the nucleus of a helium atom.

The **beta particle** is a fast moving electron that is ejected from the nucleus.

Ions are also charged particles that are atoms that gained or lost electrons.

The alpha particle is an ion of helium. Helium lost two electrons

The smallest charge we can have in physics is that of one electron or one proton.
One electron has a *relative* charge of -1 and one proton is +1.

We say relative charge because we haven't given a unit. Each electron or proton also has an absolute charge

Charge is a measure of the number of charged particles and is measured in coulombs after Charles-Augustin de Coulomb.

The magnitude of the charge on an electron, e, or proton, p, in coulombs is e = -1.6×10^{-19} C and p = $+1.6\times10^{-19}$ C.

+ for proton; - for electron

All charges are multiples of electrons or protons.

The total charge of a number of negative charges is:

Total negative charge = (number of negative charges) × (charge of a single negative charge)

The total charge of a number of positive charges is:

Total positive charge = (number of positive charges) × (charge of a single positive charge)

<u>Worked examples</u>

Q1) *Calculate* the total charge of 2 electrons in coulombs?
A1) One electron has a charge of -1.6×10^{-19} C.
Two electrons have a charge of 2 x (-1.6×10^{-19} C) = -3.2×10^{-19} C.

Q2) *Calculate* the total charge of 3 protons and 2 electrons?
A2) 1 proton has a charge of $+1.6\times10^{-19}$ C
3 protons have a charge of 3 x ($+1.6\times10^{-19}$ C) = $+4.8\times10^{-19}$ C

2 electrons have a charge of -3.2×10^{-19} C.

We add the +ve and -ve charges together to give:

Total charge = (total charge of positive charges) + (total charge of negative charges)
= $+4.8\times10^{-19}$ C + (-3.2×10^{-19} C)
=$+1.6\times10^{-19}$ C

Q3) A battery pack holds 9.6 C of charge, calculate how many free/unbound electrons it contains?
A3) We say "free" or "unbound" electrons because there are many bound electrons in atoms that we don't care about.

Total negative charge = number of negative charges x charge of a single electron

Number of negative charges = Total negative charge/charge of single electron

= 9.6 C/ (-1.6×10^{-19} C)
= -6×10^{20}

Obviously we can't have a negative number of electrons. So the charge in the questions should be -9.6 C, but since almost all charges are made of many electrons we tend to leave out (forget about/ignore) the minus sign.

Practice A

1) What is the charge of 40 protons.

2) What is the charge of an alpha particle.

3) What is the total charge of 6 protons and 8 electrons.

4) What is the total charge of a sodium ion in coulombs?

5) What is the total charge of an oxygen ion in coulombs?

6) How many electrons are there in -160 C?

7) If you needed to increase the charge of a battery pack from 10 C to 14 C, how many electrons would you need to add? (ignore signs)

Assessment A

Which statements are incorrect?

1

A	All atoms are neutral
B	It requires more (free) electrons to make -100C than it does to make -5C
C	Ions are always positively charged
D	The charge on a aluminium ion is 3+

2

A	A chloride ion has a charge of -1.6×10^{-19} C
B	-4.8 C has 3×10^{20} electrons
C	A hydrogen nucleus has a charge of -1.6×10^{-19} C
D	A van de Graaff generator dome has 15000 more protons than electrons thus a charge of +2.4 C

Objective B: To define current and use I=Q/t

Current is defined as the rate of flow of electric charge past a fixed point.

Simply, that means how much charge flows (how many charged particles flow) past a point in 1 second.

Thus the unit of current, the ampere (A), is defined as 1 coulomb of charge passing a point in 1 second.
Similarly
1 coulomb of charge passes a point when a current of 1 ampere flows for 1 second.

The equation definition is **I = Q/t**, where:

- Q is charge (in units of coulombs[C])
- I is current (in units of amperes [A])
- t is time (in units of seconds [s])

Study tip
Be able to rearrange the subject of the equation and apply it.

Note: A current has the same value at any point in a single closed loop.

Worked Examples

Q1) Calculate the amount of charge passing a point in 10 s if a current of 5 A is flowing.

A1) Our first step is to convert all quantities to their base units.

I = 5 A
t = 10 s

Amps are the base unit of current and seconds are the base units of time, so we don't need to convert these quantities.

Study tip
Leaving in the units helps us to check the units are sensible and we can sometimes cancel matching units to simplify.

We want to find the charge from current and time, so we need to make charge the subject (the left hand side on its own) of the equation. We multiply both sides of the equation I = Q/t by t to give

Q = I t

Then we put in the values along with their units.

Q = 5 A x 10 s = 50 As = 50 C.

Q2) What current is required to supply a charge of 24 C in 2 mins.

A2) Again, the first step is to convert the quantities to their base units.

Q = 24 C (no change)
t = 2 min (1 min = 60 s)
= 2 min x (60 s/1 min)
= 120 s

We are asked to find the current, so we must make current the subject of the formula

I = Q / t = 24 C / 120 s = 0.2 C/s = 0.2 A

Practice B

1) A charge of 5 C passes through a resistor in 20 s. Calculate the current.

2) A current of 12 A flows through a thermistor for 4 minutes. Calculate how much charge passes through the thermistor.

3) How long must a current of 1.6 mA flow for to build up a charge of 6 C in a capacitor? Give your answer in hours.

4) If it takes 4 hours to provide a charge of 10 C, how long would it take to deliver the same charge if the current was doubled?

5) During a solar eclipse lasting 1 hour the solar panels of a solar farm receive no sunlight and no current flows. If the usual current flow is 1 kA, how much less charge is accumulated that day.

Assessment B

A student charged a power pack that could store 2 kC of charge for 6 hours using a current of 25mA. What percentage of its capacity was the power pack charged to?

A) 17 % B) 54 % C) 27 % D) 33 %

Objective C: To define and describe resistance

Resistance is a property of a material that opposes the flow of a current.
A resistor reduces the current flow.

As we learned before, current is the flow of charges, valence shell (de-localised) electrons, through a piece of metal. Resistance in wires and fixed resistors is caused by the opposition of the material to the flow of the electrons. The origin of this resistance is the positive metal ions in the lattice that act as an obstacle that the blind electrons bump into and slows their progress. Thermistors and LDRs are more sophisticated materials called semiconductors.

Factors that affect the resistance of a metal.

Temperature. The hotter a metal is the faster the ions vibrate (move side to side). This means the electrons have more chance of bumping into them.

Material/metal. Some metals have ionic lattices that have smaller gaps making it harder for the electrons to pass through.

Length & thickness. One of the required practicals of GCSE is measuring how resistance varies with length, but if you are triple you might be expected to know how resistance varies with material and wire thickness.

The reason that resistance increases with wire length is easy to understand. The electrons slowly bounce their way through the wire like the metal ball in a pinball machine. If that path is longer, it takes longer for the electron to pass through the wire.

If the cross sectional area is larger, there will be more free electrons in each length of wire to pass the current.

Different materials have different numbers of free electrons per unit volume that can pass the current.

Worked Examples

Q1) Which wire will have the greater resistance: (A) a copper wire 5mm thick and 10 cm long or (B) a copper wire 4mm thick and 12 cm long?

A1) A is thicker and shorter, both of which lead to lower resistance, so the answer is B.

Q2) Which metal would likely have the lower resistance (A) one with small ions that are spaced far apart from each other and lots of free electrons or (B) a metal with large ions that are close together and few free electrons?

A2) In A the many electrons would have less chance of bumping in to an ion, so A would have a lower resistance.

Practice C

1) Which wire will have the greater resistance: (A) a silver wire 5mm thick and 10 cm long or (B) a silver wire 6 mm thick and 9 cm long?

2) Which wire will have the greater resistance: (A) a silver wire 8mm thick and 0.1 m long or (B) a silver wire 0.006 m thick and 10 cm long?

3) Which wire will have the greater resistance: (A) a copper wire 80 cm thick and 0.1 m long or (B) a copper wire 1 mm thick and 10 cm long?

4) Which wire will have the greater resistance: (A) a silver wire 8mm thick and 0.1 m long or (B) a copper wire 8 mm thick and 10 cm long? Silver has more free electrons per unit volume.

Assessment C

A copper wire (A) is 8mm thick and 0.1 m long and has a higher resistance than a silver wire (B) that is 10 mm thick and 20 cm long.

A wire C is made of silver and is 20 mm thick and 0.15 m long and a wire D is made of copper that is 0.004 m thick and 20 cm long. Rank all 4 wires in terms of their resistance from highest to lowest.

Highest
2nd
3rd
Lowest

Tutorial 3 – Potential Difference, circuits and components

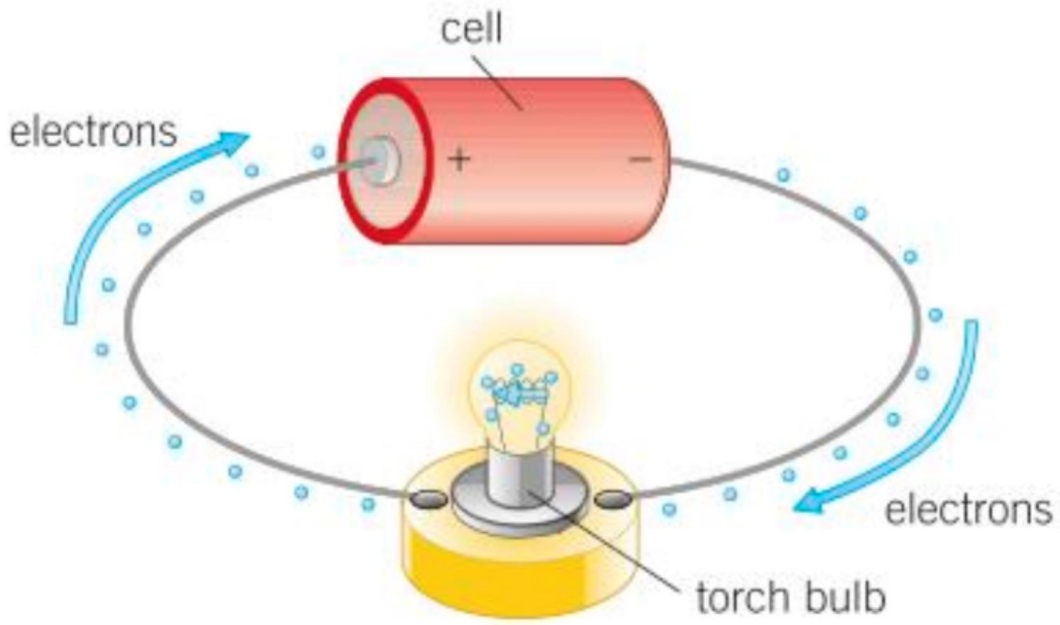

Objectives of Tutorial 3

A. To define potential difference.
B. To define the purpose of components.

Objective A: To define potential difference

Potential difference should be looked at from two points of view. From both viewpoints the idea of potential difference is a change in energy per unit charge.

One is when we consider charge passing through the terminals of a battery, cell or power supply. Here, work is done by the cell on the charges giving them energy. The higher the potential difference of the battery or power supply, the more energy is transferred to each charge. Since the charges have more energy after leaving the power supply than when they arrived, they have a potential difference which can be measured by a voltmeter.

As the charges pass through the components of the circuit, for example a resistor, work is done by the charges on the resistor. In the case of a resistor the work is done heating up the resistor. Work is also done heating up a filament bulb -- which causes it to glow.

Since the charges have done work crossing the component, a voltmeter connected across the component would show a potential difference, i.e., the charges have less energy when they exit the component than they had when they entered.

Worked examples

Q1) Name a component than gives a positive potential difference, meaning that the charges gain energy?

A1) A cell, battery or power supply give a positive potential difference.

Q2) The following diagram shows a simple circuit. Where would you place the voltmeter to measure the potential difference across the 10 Ω resistor?

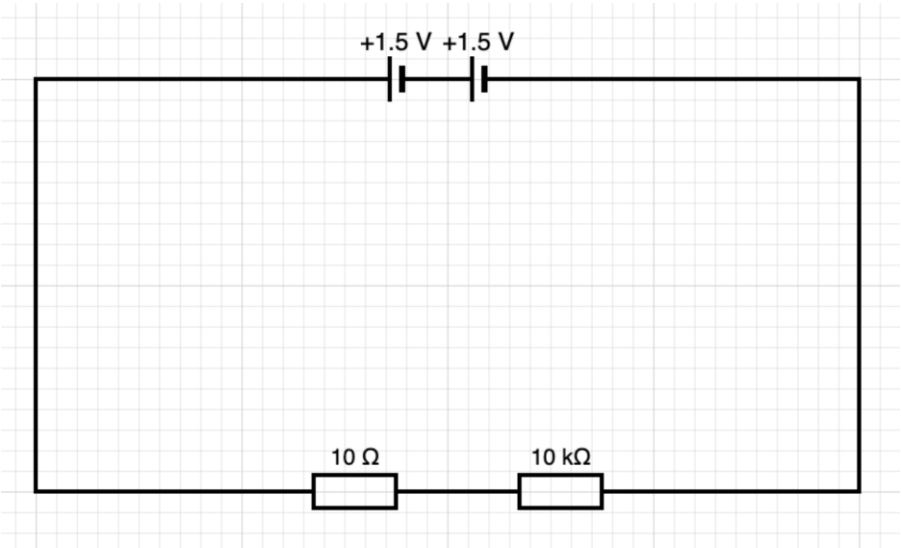

A2)

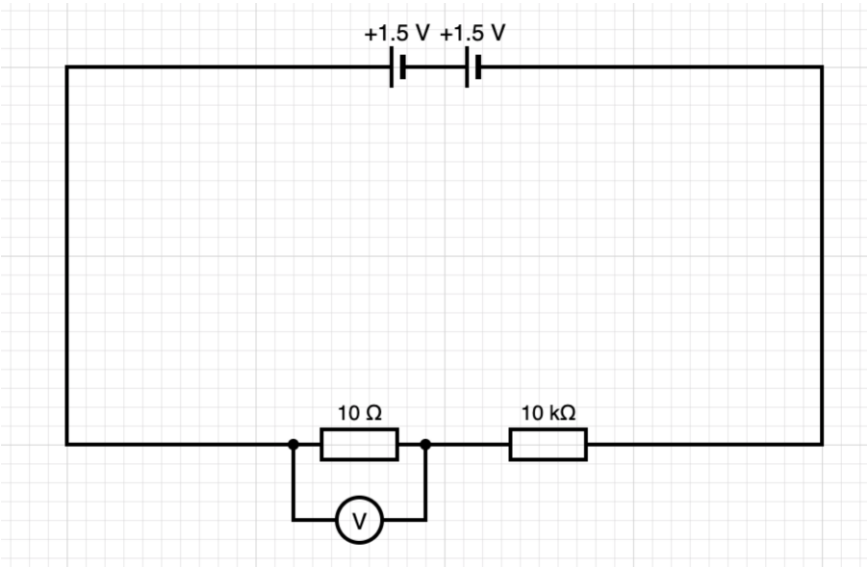

Practice A

1) What gains energy when passing through a cell?

2) Which of the following cause a negative potential difference (i.e. charges lose energy)?
A) Power supply (B) resistor (C) long wire (D) cell

3a) On the diagram below add a voltmeter (labelled V_1) to measure the potential difference across the 1 kΩ resistor.

3b) On the same diagram add a voltmeter (labelled V_2) to show the potential difference gained across one cell.

3c) On the same diagram add a third voltmeter (labelled V_3) to show the potential difference gained across all the cells.

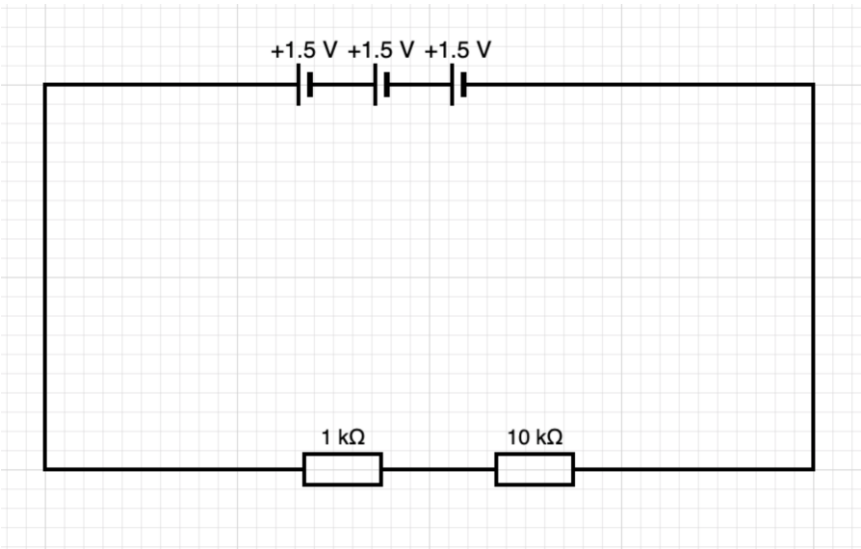

4) If the total potential difference across the battery in a series circuit was +6 V, what would the potential difference be across all other components?

5) If the potential difference displayed by a voltmeter across a resistor was +1.4 V, what should you manually do to give the correct sign for the potential difference?

Assessment A

Which statements are correct?

A) A voltmeter across a resistor measures a drop in potential difference (the energy lost by the charges)
B) A voltmeter across a battery tells you the force the battery exerts on the charges.
C) An ammeter gives energy to charges.
D) A voltmeter can measure how much energy is provided per unit charge by a cell.

Objective B: To define the purpose of components

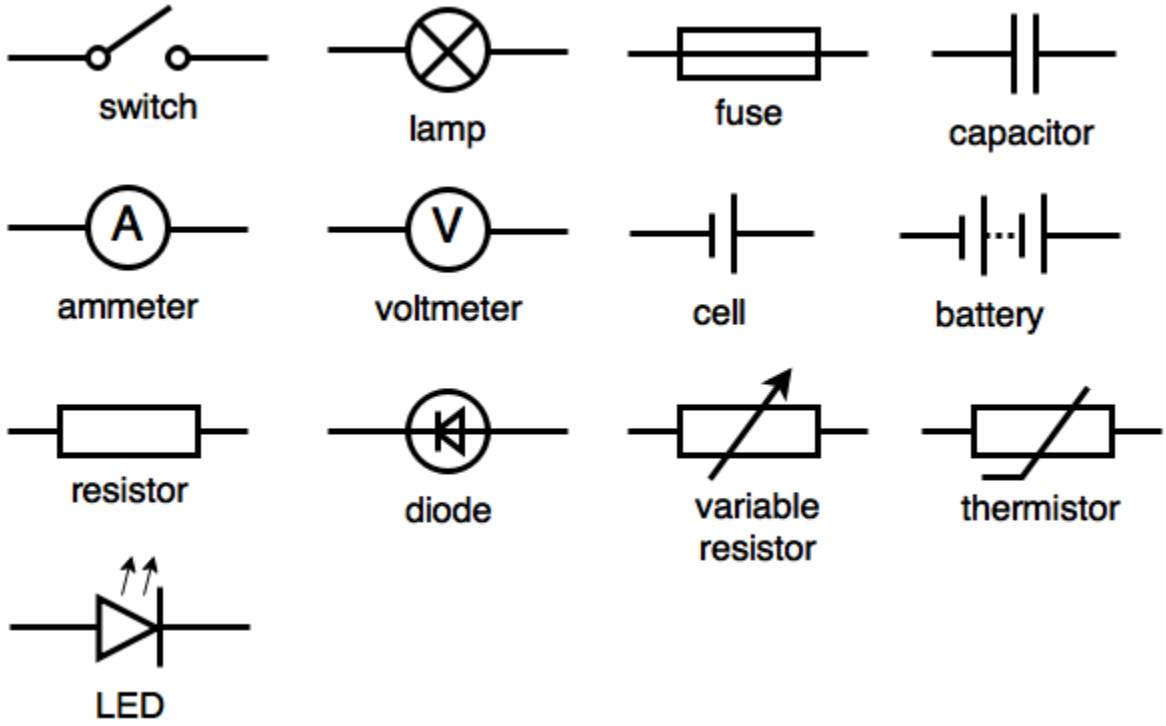

The different components in a circuit allow the circuit to produce a chosen response. I.e. they do something we want them to do. For example your teachers wear name badges so people know their names and that they work at this school.

A **thermistor** is a resistor that changes resistance depending on the ambient temperature (room temperature).

A **diode** makes sure current can only flow in one direction AND that current will only flow if the potential difference is above a threshold (minimum) value.

Other useful definitions that you will need to study to answer the following questions are below.

A **resistor** is placed in a circuit to reduce current flow.

A **light dependent resistor (LDR)** is a resistor that changes value depending on the ambient light level (room brightness). They normally respond to visible light.

A **bulb/lamp** in a circuit is to show clearly that there is current flow. Its resistance changes with potential difference.

A **fuse** breaks the circuit if too high a current flows.

A **light emitting diode (LED)** emits light if a current flows in the correct direction and if the potential difference is above a threshold (minimum) value. They normally emit visible light (red, blue, green, white).

A **cell, battery, or power supply** provides energy to each charge flowing through the terminals. They cause a current to flow.

An **open switch** breaks the circuit and stops current flow. A **closed switch** allows the flow of current.

A **variable resistor**'s resistance can be manually altered (often using a dial). This allows you to control the current in a circuit.

A **voltmeter** measures the potential difference across a component (or set of components). It has an extremely high resistance.

An **ammeter** measures the current flow through a branch of a circuit.
It has almost no resistance.

Worked examples

Q1) Write the definition for the following symbol

A1) Look above => A **diode** makes sure current can only flow in one direction AND that current will only flow if the potential difference is above a threshold (minimum) value.

Q2) Define the purpose of the following component 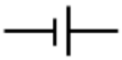

A2) It's a cell. To move charges around a circuit. To cause a current to flow. To give energy to the charges passing through the terminals.

Q3) If a component will break if too large a current flows through it, select which ONE component you should add to prevent this from happening?

A diode, a fuse, a switch, a cell.

A3) A diode will reduce the current, but the amount of current has no limit. So the component could still get damaged.

A switch, if closed, will allow the current to flow. So the component could still get damaged.

A cell will increase the current flow. So the component could still get damaged.

A fuse will break the circuit if too high a current flows. This will prevent the component from breaking.

Practice B

1a) State why you might place a bulb in an experimental circuit?

1b) Explain whether adding an ammeter reduces the current.

1c) State which component(s) you would add if you wanted to make sure current only flows in one direction.

2a) If the current in a circuit is very high, state which component(s) you might add to reduce the current flow? A resistor, a diode, a switch, an ammeter, a bulb.

2b) State how you can change/alter the resistance of the following components:
variable resistor (rheostat), LDR, thermistor, piece of wire.

3a) A dimmer switch in your living room is likely to contain which key component?

3b) If you wanted to make a circuit where a set of street lights turn on when it gets dark, state which key component your circuit is likely to include?

Assessment B

Which statements are incorrect?

a) Diodes always pass a current in one direction, regardless of potential difference.
b) A thermistor is a fixed resistor.
c) A voltmeter has extremely high resistance.
d) An ammeter has almost no resistance.
e) A bulb is a type of resistor.
f) A light dependent resistor only responds to one colour of light.

Tutorial 4 – Ohm's Law and IV characteristics

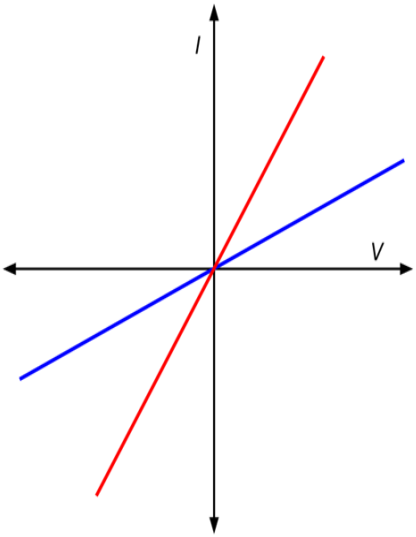

Resistors at a constant temperature

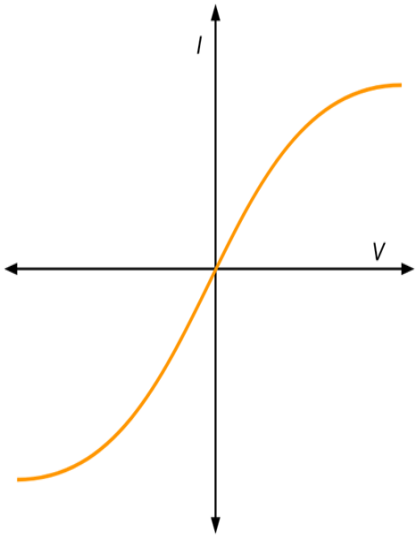

Filament bulb

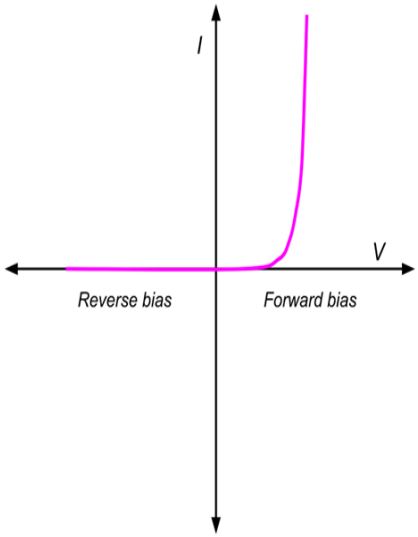

Semiconductor diode

Objectives of Tutorial 4

A. To define and use Ohm's law.
B. To describe and interpret IV characteristics.
C. To use graphs to analyse components.

Objective A: To define and use Ohm's law

Ohm's law relates the quantities potential difference, current and resistance. In words it is stated as the electric current (I) through an ohmic resistor - with constant resistance (R) - is directly proportional to the potential difference (V) across it.

The equation is

$$I = V/R$$

and helps define the volt.

One volt is the potential difference across a component of resistance 1 Ω when a current of 1 A passes through it.

The higher a component's resistance, the greater the potential difference there will be across that component and the lower the current will be.

Worked examples

Q1) Rearrange Ohm's Law to make resistance the argument (subject). Show all working.

A1) I=V/R
multiply both sides by R to give RI=V
divide both sides by I to give
R=V/I
Q2) If a resistor has a resistance of 100 Ω and a potential difference of 10 V is across it, what current will pass through it?
A2) I = V/R = 10 V/100 Ω = 0.1 A

Q3) If a resistor has a resistance of 1 kΩ and a current of 0.15 mA passes through it, what is the potential difference across it in mV?

A2) R = 1 kΩ = 1000 Ω
I = 0.15 mA = 1.5 x 10^{-4} A
V = IR = 1.5x10^{-4}Ax1000 Ω = 0.15 V
to go from V to mV we multiply by 1000, so
V = 0.15 V x 1000 mV/V = 150 mV

Practice A

1) Rearrange Ohm's Law to make voltage the argument (subject). Show all working.

2) If a resistor has a resistance of 10 Ω and a potential difference of 10 V is across it, what current will pass through it?

3) What is 1 Ω in terms of volts and amps. I.e., define the ohm?

4a) If the current through a resistor is 1 A when we use 1 cell, what will the current be when 2 cells are used.

b) If an identical resistor is added in series to the circuit with 1 cell, what would the current drop to?

5) A potential difference of 1 kV is applied across a resistor of 0.4 kΩ, what is the current?

6a) If a tiny current of 0.1 μA passes through a resistor of 10 MΩ, what is the potential difference across the resistor?

6b) What will happen to the current if the potential difference is increased?

Assessment A

Which statements are incorrect?

A	Adding more cells increases the resistance of an ohmic resistor
B	Readings from a voltmeter and ammeter can tell us the resistance of a component
C	A current of 10 μA will flow through a bulb with a p.d. of 10 V and resistance of 10 kΩ
D	Increasing the current can be done by increasing the p.d. or decreasing the resistance

Objective B: To describe and interpret IV characteristics

One of the required practicals of GCSE physics is to measure the IV (current - voltage) characteristics of 3 components: a fixed ohmic resistor, a light emitting diode (LED) and a filament bulb.

You need to know how to take the measurements, what the graphs mean and how to analyse them.

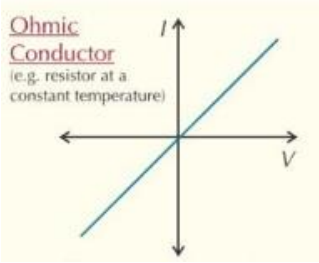

The IV graphs for each component are graphs of current plotted against voltage.

Ohmic resistor - this is a straight line through the origin. What does this mean? Since I = V/R, the graph of I vs V has a gradient (slope) of 1/R. For an ohmic resistor with a straight line, this means the resistance is constant.

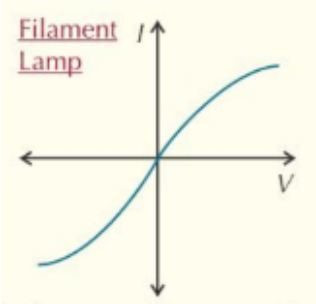

Filament bulb - the IV graph rises with a constant value before the slope gets shallower. This behaviour is due to the resistance increasing as current increases. The resistance increases because the filament gets hotter and the ions vibrate faster.

LED - the graph is a horizontal line at 0 A until the voltage passes a threshold (minimum) value and then the current begins to increase. A horizontal line means the gradient is zero, so 1/R = 0. For this to happen the resistance has to be really large (we might say infinite).

What the gradient/slope mean: The steeper the slope, the lower the resistance. The shallower the slope, the higher the resistance.

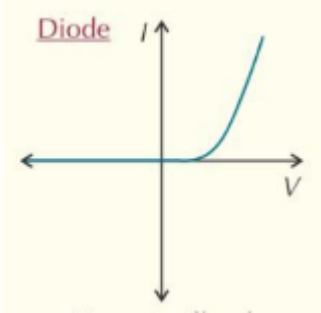

Fig 4.1

Worked examples:

Q1a) Which component has a current that is directly proportional to potential difference?
A1a) Only the ohmic resistor is a straight line through the origin.

Q1b) Which component has a resistance that is constant with potential difference?
A1b) Only the ohmic resistor has a resistance that doesn't change as the voltage increases.

Q1c) Which component has a resistance that increases with potential difference?
A1c) Only the filament bulb. Its IV curve flattens out meaning the resistance increases with increasing potential difference.

Q2) In the IV graph below, identify the 3 different components (diode, ohmic resistor or filament bulb?) indicated by measurements with three different symbols.

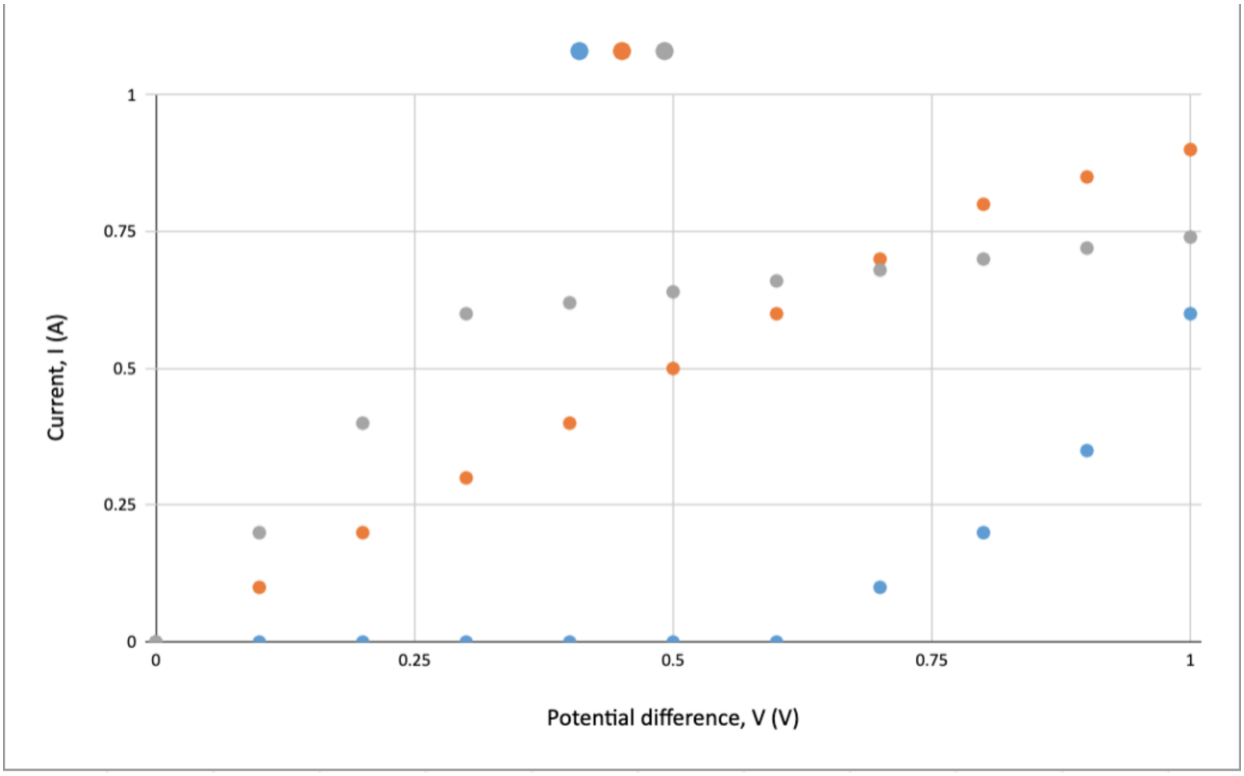

Fig 4.2

A2) Blue - LED
orange - filament bulb
grey - filament bulb

Q3) If we have two ohmic resistors (A and B) and one has a higher resistance, which resistor would be higher on the IV graph for +ve voltage and +ve current?
A3) The lower resistance resistor will have a steeper gradient and thus be higher on the IV graph.

Practice B

1a) State which components (ohmic resistor, filament bulb or diode) that have a current that is proportional to voltage?

1b) Which component has a resistance that decreases with voltage?

1c) Which component has a resistance that increases with voltage?

2) Without looking at your notes, draw the IV graphs of each component with as much detail as possible. There is extra space on the previous page.

3) If a filament bulb has no increase in current for an increase in potential difference, what is its resistance? Zero or infinite?

4) The gradient of the ohmic resistor (A) below is 1 Ω^{-1}, draw a line for an ohmic resistor with twice the resistance (B) and half the resistance (C).

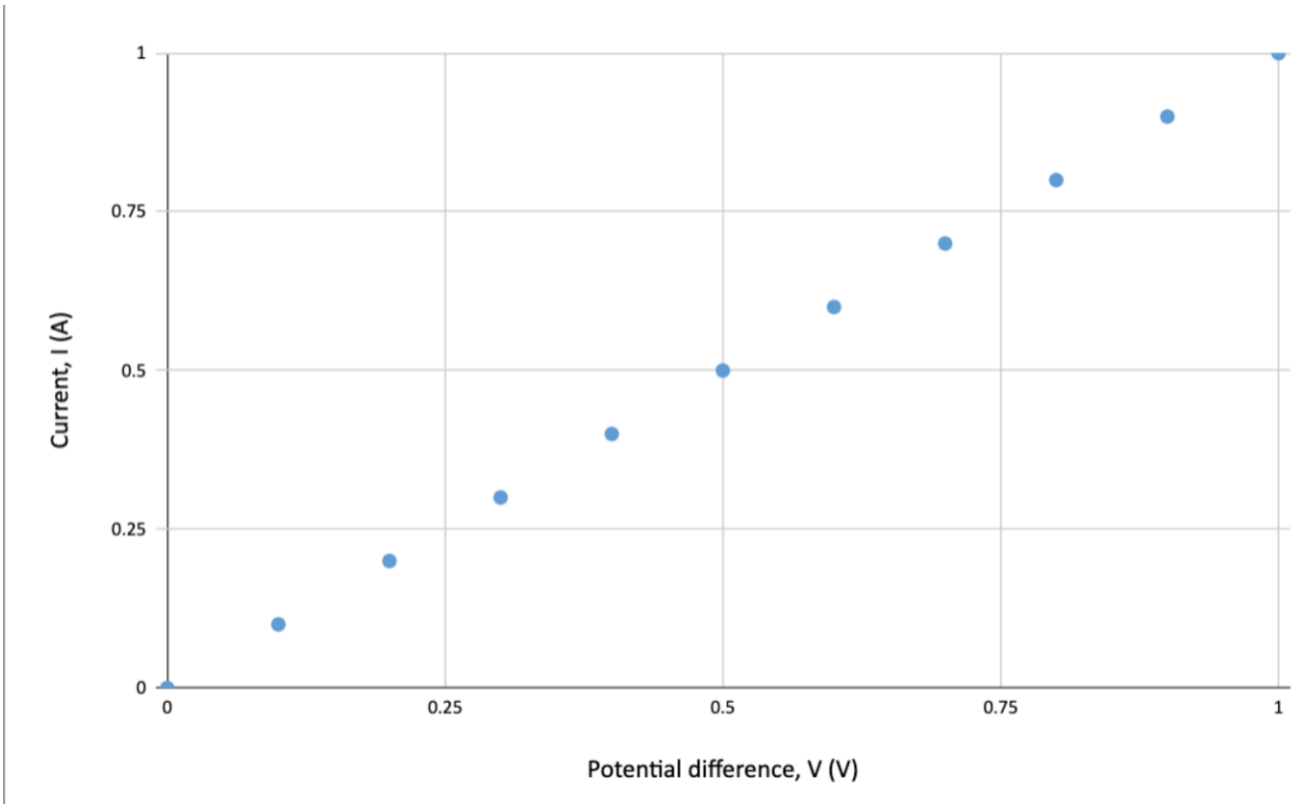

Fig 4.3

5) The I-V graph of a filament bulb resistor is shown below. Draw and clearly identify a curve for a filament bulb resistor with a higher resistance (B) and lower resistance (C).

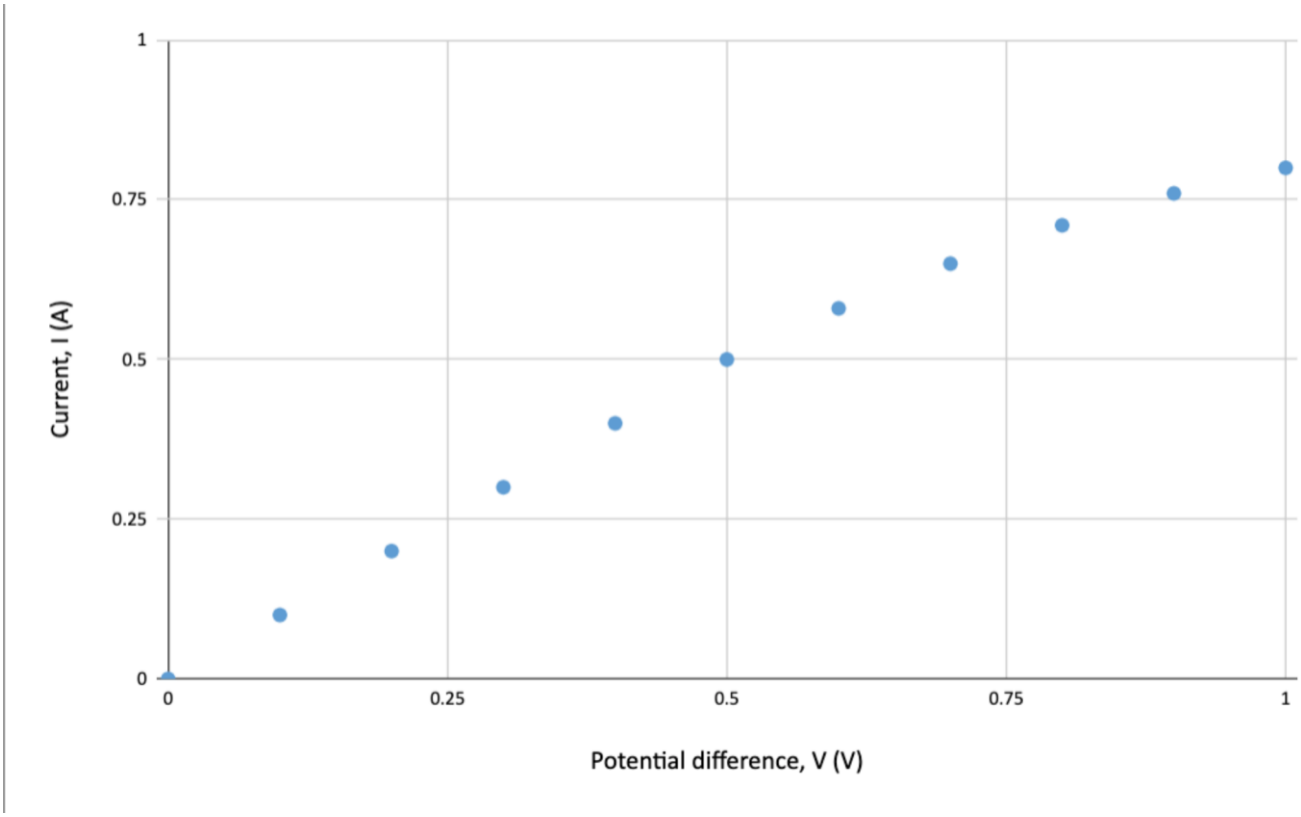

Fig 4.4

Assessment B

The graph below shows the IV graph for a regular diode (green line). Which IV graph (red, blue or grey) shows a diode with a resistance that is never larger than the regular diode?

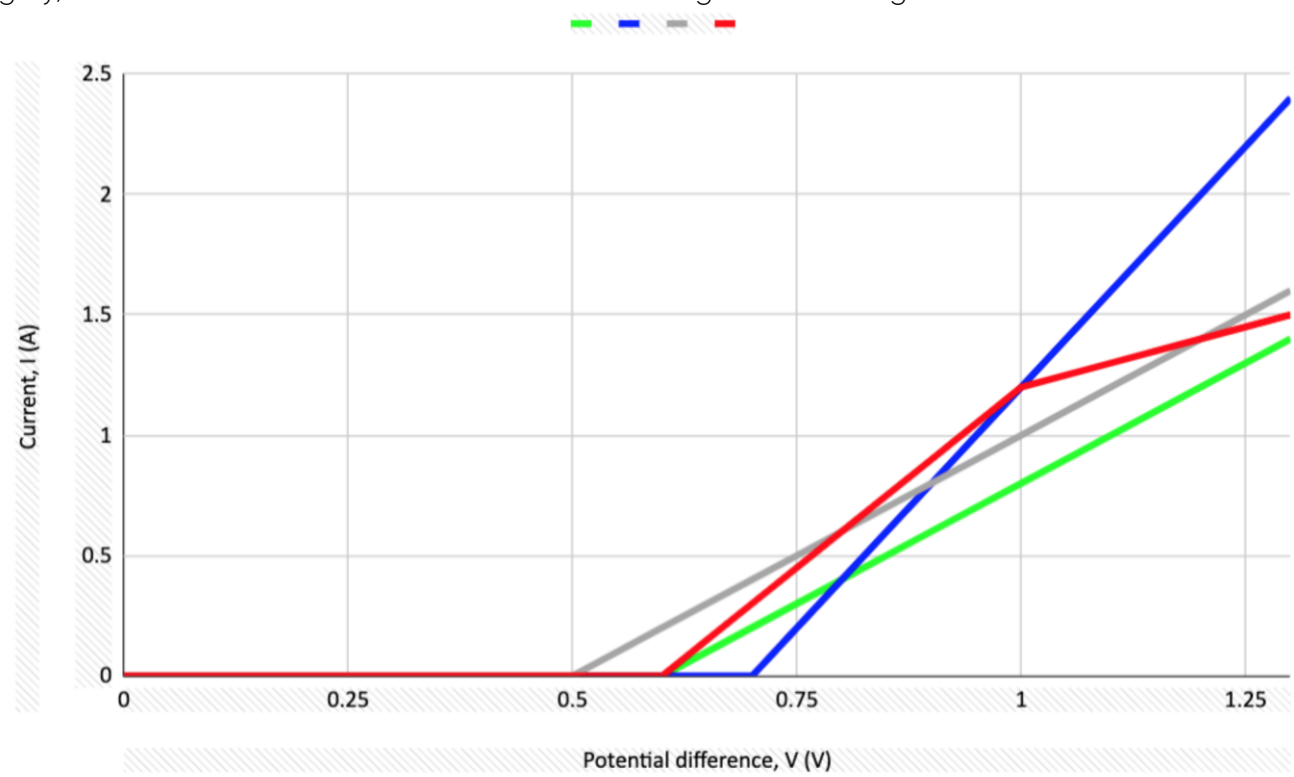

Fig 4.5

Objective C: To use graphs to analyse components

Graphs are really important tools to demonstrate the properties of circuit components- as we've just seen from the characteristics of different components.

There are several key concepts for graphing in science.

1) Axes - the vertical and horizontal (up and to the right respectively) axes are chosen such that the independent variable (the one you control) goes on the x-axis (horizontal) and the dependent variable (that changes on account of the independent variable changing) goes on the y-axis.

2) Scale - this is the value of one box of the graph paper and is important to work out.

3) Plotting points - we need to be able to find the location of any coordinate on our graph so we can plot points. We first need (2).

4) Drawing curves - we need to practice straight lines and drawing curves through points and know which to use in each circumstance.

It's rare in exams to draw graphs from scratch, so we will ignore (1) for now.

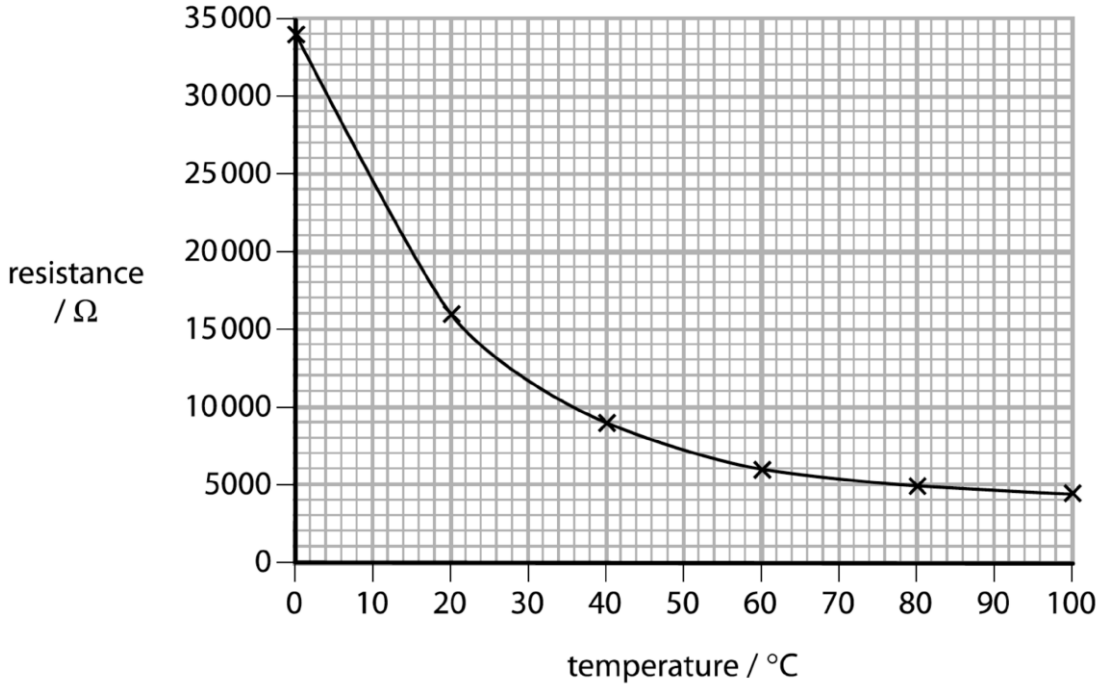

Fig 4.6

To work out the scale on a graph, we first look at the x-axis and the difference between adjacent numbers. In the graph above, the difference between adjacent numbers is 10 °C. There are 5 boxes that make up those 10 °C, so each small box has a value of 2 °C.

Worked examples:

Q1) What is the value of a single box on the y-axis?

A1) The difference between adjacent numbers is 5000 Ω. 5 boxes make up 5000 Ω, so each small box is worth 1000 Ω.

Q2) Which of the following results would you consider anomalous (doesn't fit the trend) for the graph above?

A) T=50 °C and R = 7500 Ω
B) T = 90 °C and R = 4800 Ω
C) T = 4 °C and R = 30000 Ω
D T = 10 °C and R = 28000 Ω

A2) D

Q3) Plot the point T = 55 °C and 11000 Ω.
A3) It's important to be able to plot points that are in between boxes. This point is half way between the 54 and 56 °C lines and halfway between the 10000 and 12000 Ω lines.

A straight line should be drawn through data when that is the known physical relationship between the plotted data or if that isn't known, then when no better fit to the data points is achieved with a smooth curve. In the graph above, a straight line would give a horrendous fit to the data points, so a smooth curve is drawn. It's important to use a single motion of the arm and never join the dots.

Sometimes you'll be asked to interpolate from a best-fit line. For the example above which already has a best fit line, we might be asked the temperature the gives a resistance of 10000 Ω. To find this we draw a line from 10000 Ω horizontally until it strikes the curve. From where that line strikes the curve we draw a line vertically down to the x-axis. We read where the line strikes the x-axis and this is the temperature. In this case it is 36 °C.

Practice C:

1) The results obtained by a student for the I-V graph of a fixed, ohmic resistor have been plotted on a graph.

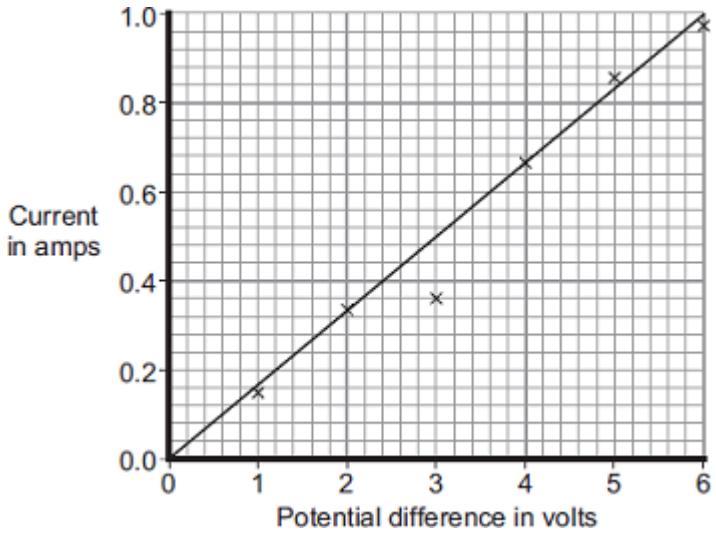

Fig 4.7

(i) One of the results is anomalous.

Draw a ring around the anomalous result.

(1)

(ii) Which **one** of the following is the most likely cause of the anomalous result?

Put a tick (✓) in the box next to your answer.

The student misread the ammeter. ☐

The resistance of the resistor changed. ☐

The voltmeter had a zero error. ☐

(1)

2) Draw a new curve on the graph in Fig 4.6 using the points (0,30000), (10, 25000), (30, 20000), (90, 18000).

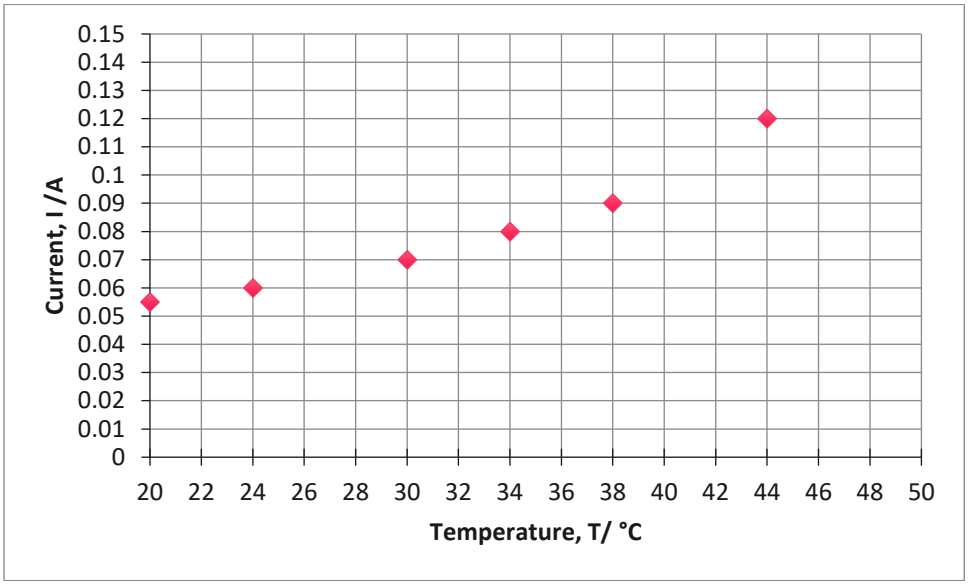

Fig 4.8

At 47 °C the current was 0.135 A.

(i) Plot this value on the graph.

(ii) Draw the curve of best fit through the points.

(iii) The supply voltage is 12V.

Calculate the resistance of the thermistor at a temperature of 42 °C.

Resistance = ... Ω

Assessment C

A student investigated how current varies with potential difference for two different lamps.

Her results are shown in Figure 4.9.

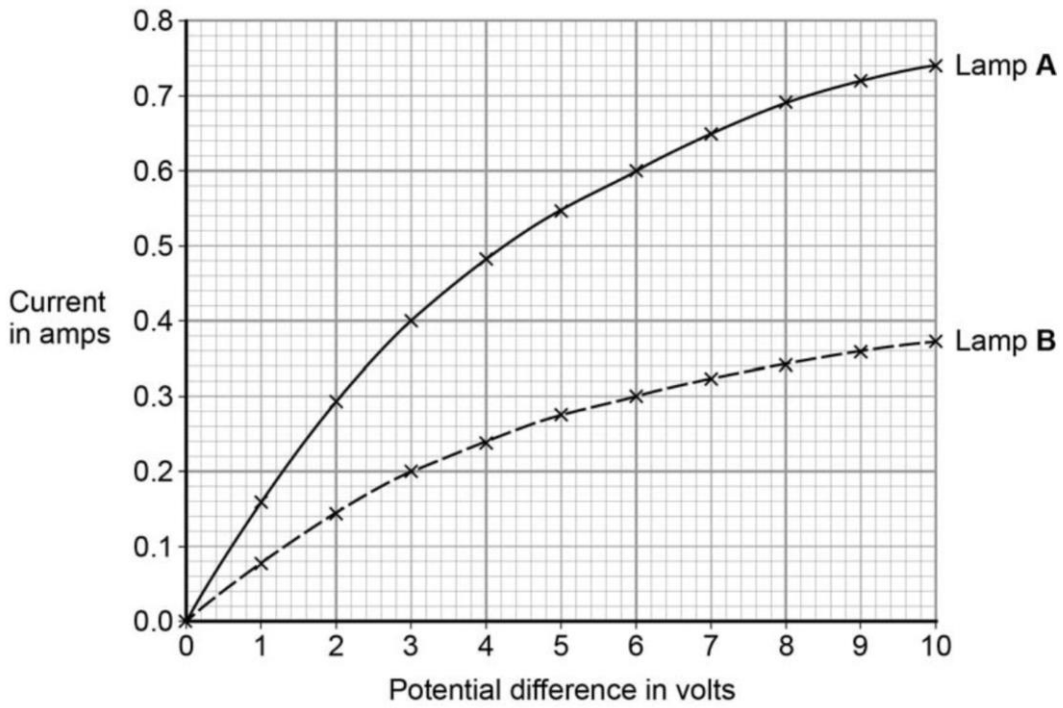

Figure 4.9

(a) What is the resistance of both lamps when the potential difference is 6 V.

Lamp A resistance _____ Ω.

Lamp B resistance _____ Ω.

Tutorial 5 – Series and Parallel Circuits

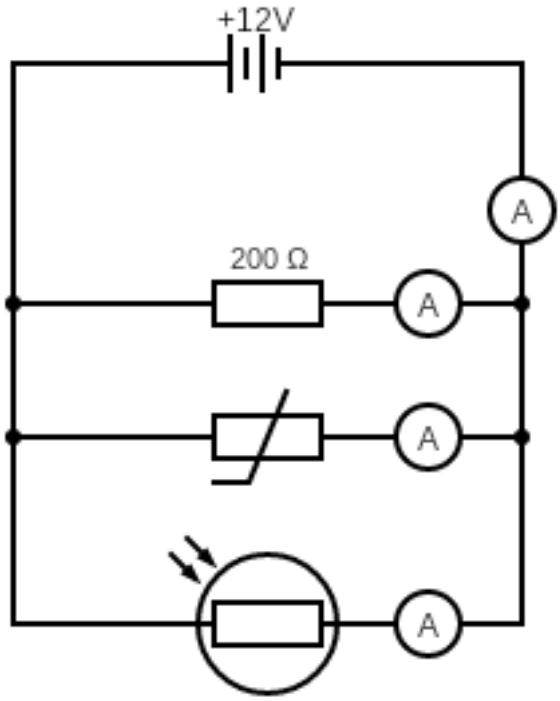

Objectives of Tutorial 5

A. To master series circuits
B. To understand the rules of current and voltage in parallel circuits
C. To understand the rules of resistance in parallel circuits

Objective A: To master series circuits

In the circuit below, the bulb, the resistor and the cell are all in series and so the number of electrons that pass through each component every second is the same. This means the current is the same everywhere.

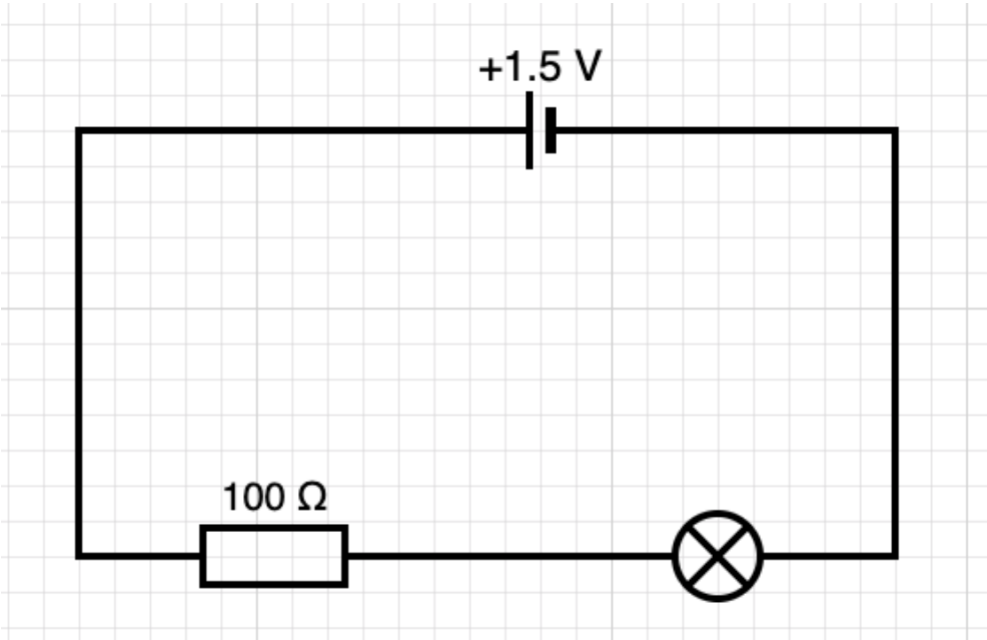

Fig 5.1

This leads us to our first law of series circuits:

In a series circuit the current is always the same everywhere. We can check this simply by using an ammeter.

Each component has its own resistance. The bulb we'll say has resistance R_1 and the fixed resistor R_2.

The total resistance of the circuit is then $R = R_1 + R_2$. If the total potential difference supplied by the cell is V, then the current is given by Ohm's law $I=V/R$.

If you add another component in series (say a diode with resistance R_3) then the resistance will change to
$R = R_1 + R_2 + R_3$. This would reduce the current.

Similarly, adding a second cell would increase the current.

The potential difference drop across each component depends on the resistance of the component. In the case of the bulb $V_1 = I \times R_1$; the fixed resistor is $V_2 = I \times R_2$; and the diode is $V_3 = I \times R_3$.

Note in each case the current is the same.

A final point is that the sum of the three potential differences dropped across the 3 components MUST equal the potential difference provided by the cell.

So $V = V_1 + V_2 + V_3$

<u>Worked examples</u>

Q1) In the circuit below, what are the readings in A_1, A_2 and A_3?

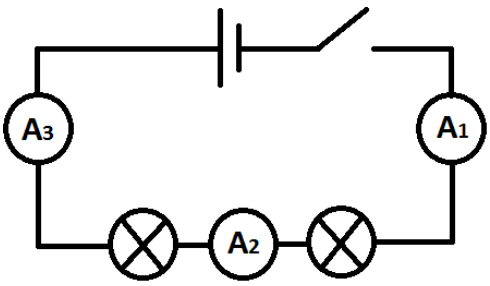

Fig 5.2

A1) Since the switch is open, the readings are all 0 A.

Q2) What are the readings in A_1 and A_3 above if the switch is closed and A_2 = 0.5 A?
A2) If A_2 = 0.5 A, then so do A_1 and A_3.

Q3) Let's say the cell above has a potential difference of +1.5 V. If the two bulbs are identical and one has a resistance R_1 = 150 Ω what does A_1 measure?
A3) If both bulbs are identical then R_1=R_2. If R_1 = 150 Ω then the total resistance is R = R_1 + R_2 = 300 Ω and so I = V/R = 1.5 V/300 Ω = 0.05 A or 50 mA.

Q4) If we added a thermistor with resistance R_3 = 100 Ω and another 1.5 V cell, what would the current drop to in milliamps?
A4) The potential difference is now 3V. R = R_1 + R_2 + R_3 = 400 Ω. Thus I = V/R = 3V/400 Ω = 0.0075 A = 7.5 mA

Practice A

1. Given a circuit with one cell, what will happen to the current if you increase the resistance?

A	The current remains the same
B	The current increases
C	The current decreases

2. What would happen to the current if you added an extra cell?

A	Remain the same
B	Increase
C	Decrease

3. Using the circuit diagram below (assume the switch is closed):
a) Add a voltmeter (labelled V_1) to measure the potential difference across the lamp to the right.
b) Add a voltmeter (labelled V_2) to measure the potential difference across the cell.

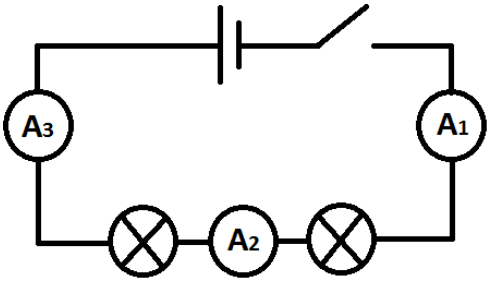

Fig 5.3

c) If V_1 = 0.8 V and V_2 = 1.5 V, what would a voltmeter across the 2nd lamp read?
d) If both bulbs had resistances of R = 50 Ω , what would the current be?
e) If we added an LDR with resistance 200 Ω, by how much would the current drop?

Assessment A

A student measured how the potential difference across a fixed resistor and a variable resistor varied as the resistance of the variable resistor was increased from 200 to 600 ohms.

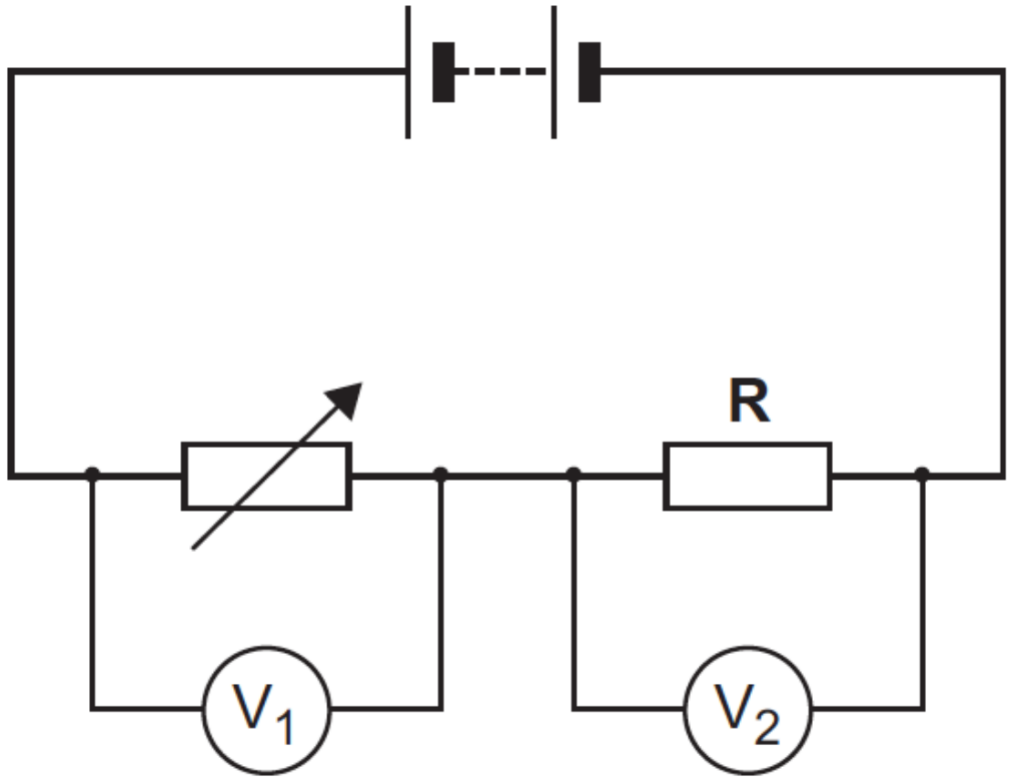

Fig 5.4

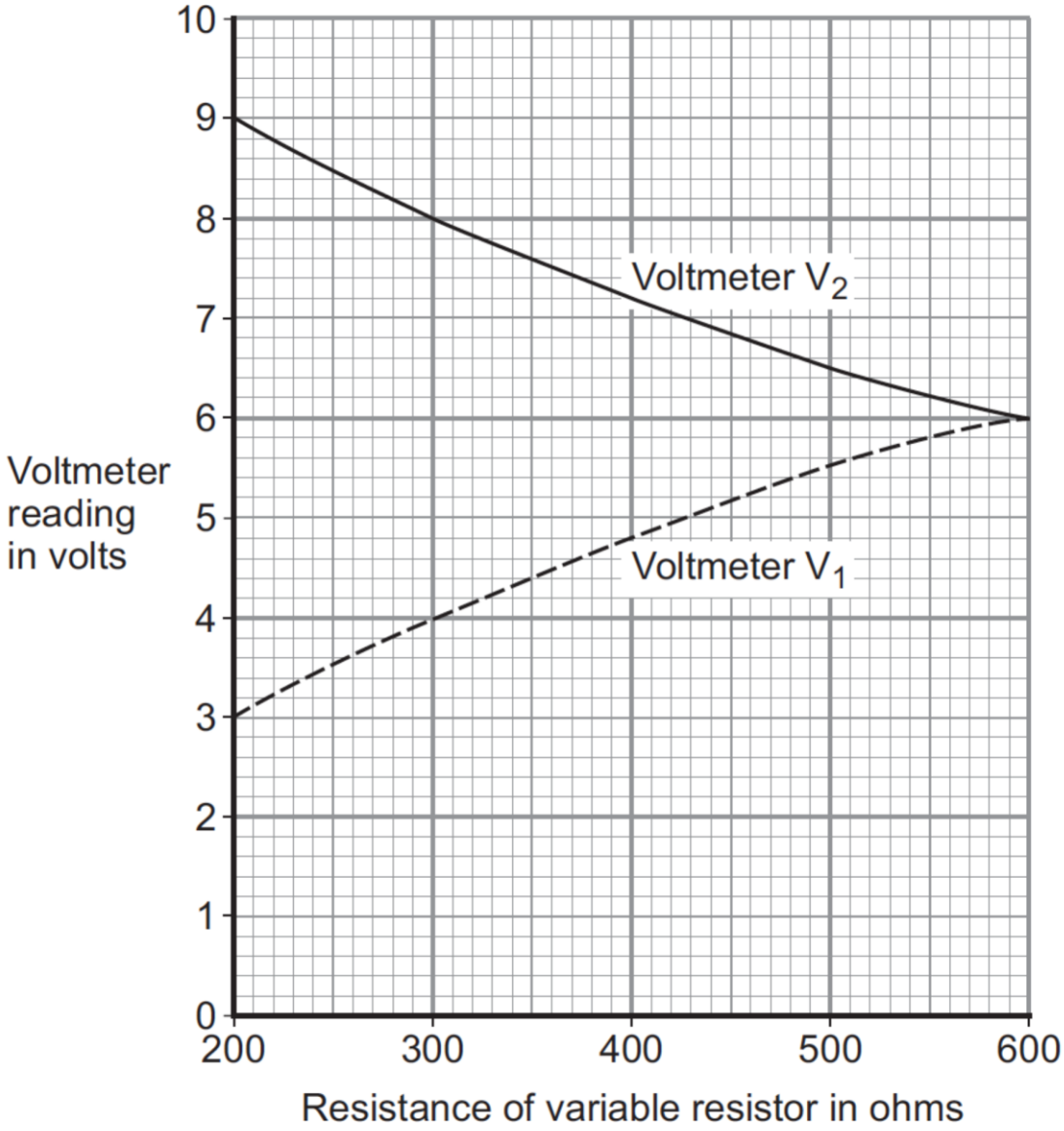

Fig 5.5

Which of the following statements are true.

A) The voltage across V_2 increases as the variable resistor's resistance increases.
B) The total resistance and current of the circuit do not vary.
C) V_1=V_2 when the variable and fixed resistors have the same resistance.
D) The supply voltage is 9V
E) When V_1 reads 4.8V the current is roughly 12 mA.

Objective B: Current and voltage in parallel circuits

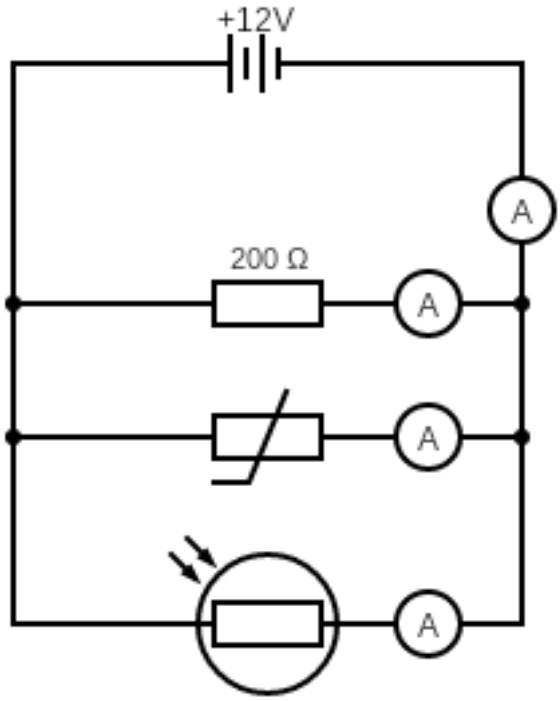

Fig 5.6

Parallel circuits have more than one loop of wire. For instance, the circuit in Fig 5.6 has 3 loops: one with a fixed resistor, one with a thermistor and one with a light dependent resistor (LDR).

The first rule of parallel circuits is that the potential difference across each loop is equal to the supply voltage (12 V in this case). So regardless of whether the charges go through the fixed resistor, thermistor or LDR they will lose the same amount of energy.

The second rule of parallel circuits is that the current splits to go down different loops -- like choosing which checkout to go to in the supermarket. This means the current measured by each of the 4 ammeters in the circuit above will be different. In fact the ammeter on the main branch (closest to the battery) will equal the sum of the other 3.

Worked examples:

Q1) In the circuit in Fig 5.6 the current passing through the thermistor is 0.1 A and through the fixed resistor is 0.06 A and through the LDR is 0.04 A. What is the current passing through the battery?

A1) The current through the battery (or ammeter nearest the battery) is the sum of the currents through the loops. In this case it is 0.1 + 0.06 + 0.04 A. = 0.2 A

Q2) If the current through the battery is 0.3 A and the current through the fixed resistor and LDR are the same as above, has the temperature increased or decreased.

A2) The current through the thermistor has increased meaning its resistance has decreased. Therefore the temperature must have increased. Higher temperature means lower resistance for a thermistor.

Q3) What is the resistance of the LDR if the current through the fixed resistor is 0.06 A, through the battery is 0.21 A and through the thermistor is 0.03 A?

A3) The current through the LDR is 0.21 - 0.06 -0.03 = 0.12 A. The potential difference is 12 V across each loop. Thus the LDR's resistance is R = V/I = 12V/0.12A = 100 Ω.

Practice B

The following circuit has a 500 Ω resistor, a filament bulb and a diode in parallel with a 10V battery.

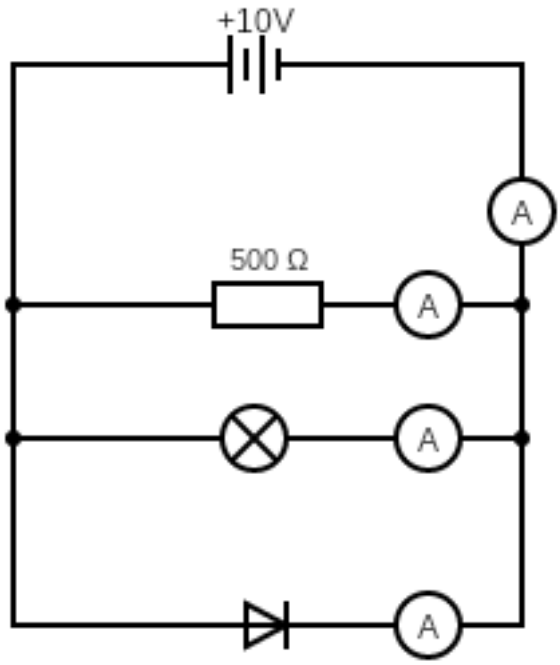

Fig 5.7

1) If the current through the battery, resistor and diode are 0.1A, 0.02A and 0.05A respectively, what is the current through the lamp?

2a) What is the current through the lamp if its resistance is 10Ω?
2b) If the current through the battery is 0.2A, what is the resistance of the diode?

3) If the temperature of the bulb is increased, what will happen to the current through the (a) fixed resistor and (b) the battery?

4) If the voltage of the battery is reduced to 0.3V, what will be the
a) current through the diode?
b) current through the lamp?
c) resistance of the lamp?

Assessment B

Which statements are incorrect regarding the circuit below?

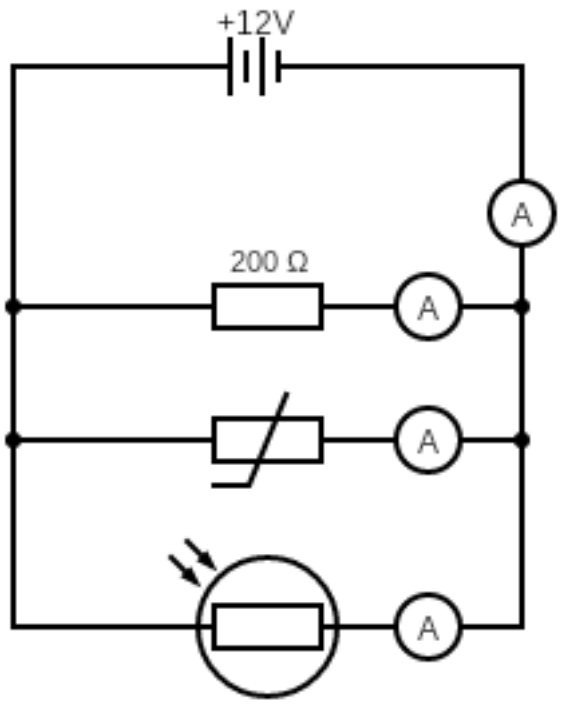

Fig 5.8

A) The current through the thermistor is always less than that through the battery.

B) At constant temperature, if we increase the light intensity, the current drawn from the battery will decrease.

C) A battery will have to be replaced quicker if the room is warmer.

D) If the LDR has a resistance of 120 Ω and the current passing through the battery is 0.2 A then the resistance of the thermistor must be 300 Ω.

Objective C: Resistance in parallel circuits

The main rule regarding resistors in parallel is that when two or more resistors are in
parallel the total resistance of the circuit is less than the smallest individual resistor.

The reason for this is that if only the smallest resistance component was in the circuit, then all the charges would have to pass through it. By adding another component in parallel, regardless of resistance, we give the charges an extra route that speeds up charges passing to the other side. Since the current flow increases, the resistance must have decreased.

Example questions:

Q1) What happens to the total resistance when the switch below is closed?

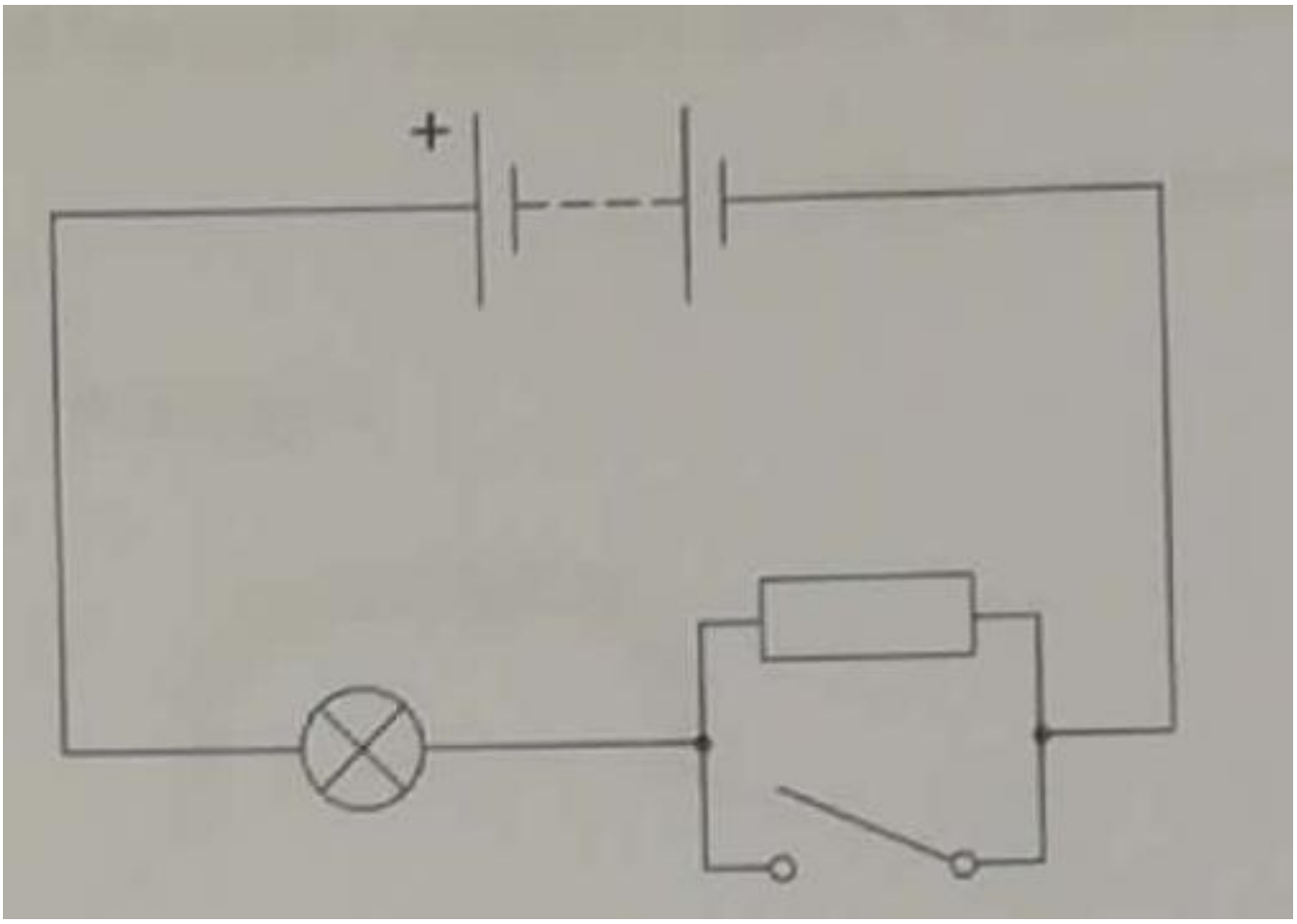

Fig 5.9

A1) While the switch is open the total resistance is the resistance of the lamp + the resistor. When the switch is closed the current avoids the resistor and goes through the switch meaning the resistance of the circuit drops to only being the resistance of the lamp. The lamp will get brighter as a result.

Q2) The lamp in the circuit shown in Fig 5.10 has a resistance of 10 Ω and each

resistor also has a resistance of 10 Ω. What is the total resistance of the circuit?

A) Between 20 and 30 Ω.

B) Exactly 20 Ω.

C) More than 30 Ω.

D) Less than 20 Ω.

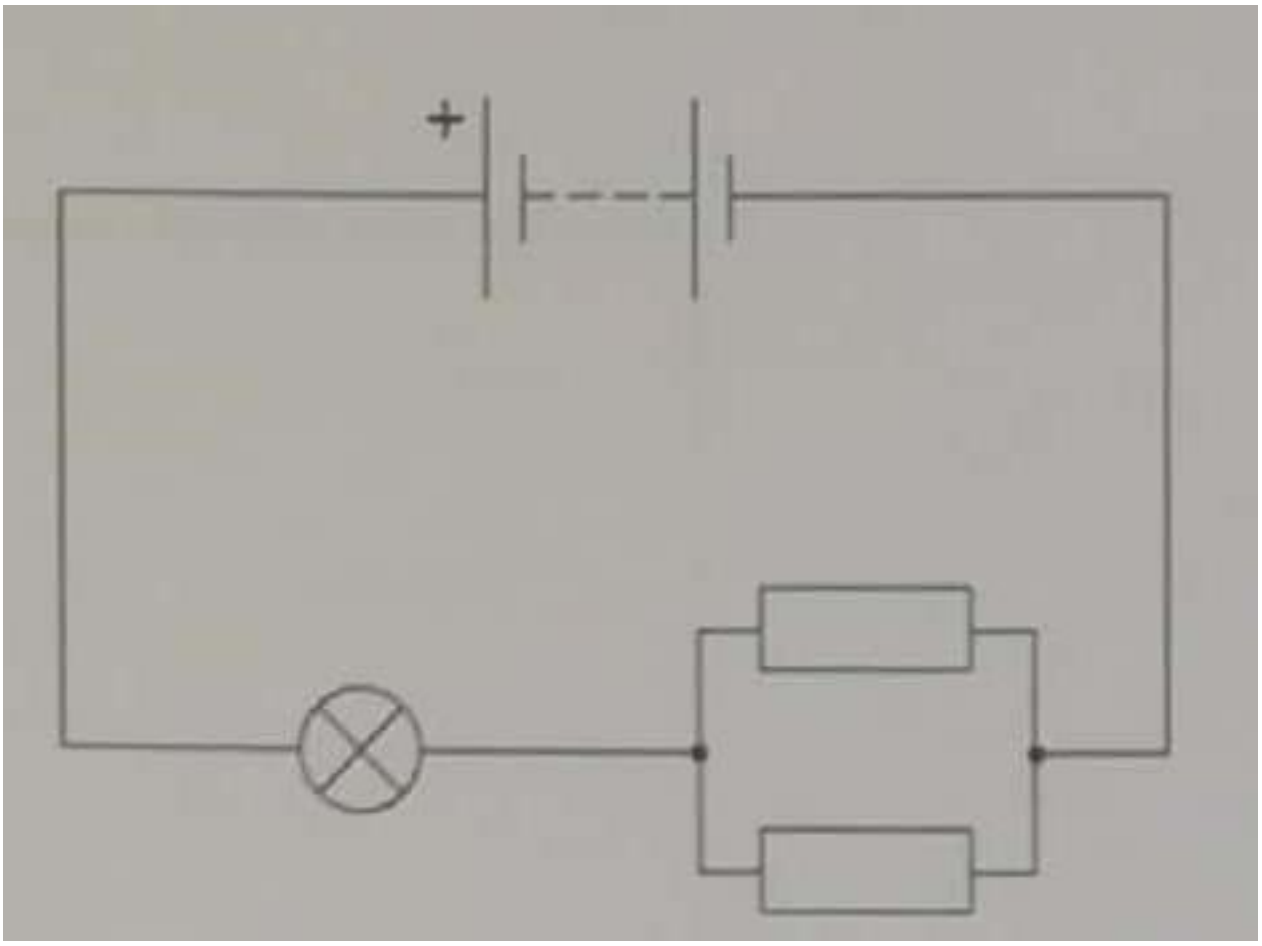

Fig 5.10

A2) Less than 20 Ω. The resistance of the two parallel resistors is less than 10 Ω. The bulb and the 2 resistors are in series so total resistance is 10 Ω + less than 10 Ω. This is less than 20 Ω.

Q3) If the bulb in the circuit of Fig 5.10 has a resistance of 20 Ω and the top resistor has a resistance of 40 Ω and the bottom resistor 10 Ω what is the maximum value of the circuit's resistance?

A3) The maximum resistance is the parallel pair of resistors is the smallest resistance -- 10 Ω. Thus the maximum total resistance is 10+20 Ω = 30 Ω.

Practice C

1) If the switch in Fig 5.9 was replaced with a lamp, explain whether the resistance of the circuit would decrease?

2) If the lamp and resistor in Fig 5.9 had resistances of 10 Ω and the switch was replaced with thermistor would there be any (reasonable) temperature that could increase the circuit's resistance above 20 Ω ?

3) If the bulb in Fig 5.10 has a resistance of 0.5 kΩ and the top resistor has a resistance of 70 Ω and the bottom resistor 1 kΩ what is the maximum value of the circuit's resistance?

Assessment C

Which statements are true:

A) The resistance of a parallel circuit is exactly equal to the minimum resistance of one of the loops.
B) The resistance of a parallel circuit with 2 loops is always more than the same circuit with a third loop added.
C) Fig 5.8 has a minimum resistance of 200 Ω.

Tutorial 6 – Final Assessment 30 minutes

Tutorial 7 - Feedback

What is the Purpose of Tutorial 6?

- To receive feedback on final assignments.
- To share examples of best practice with the other pupils in your group.
- To write targets for improvement in school lessons.
- To reflect on the programme including what was enjoyed and what was challenging.

Final assignment feedback

What I did well...	What I could have improved on...
•	•
•	•
•	•

My target for future work is...

Reflecting on Uni Pathways

What did you most enjoy about Uni Pathways?
• • •

What did you find challenging about the programme?	How did you overcome these challenges?
• • •	• • •

Notes

Notes

Electrical circuits

Key Stage 4 Programme

researchersinschools.org