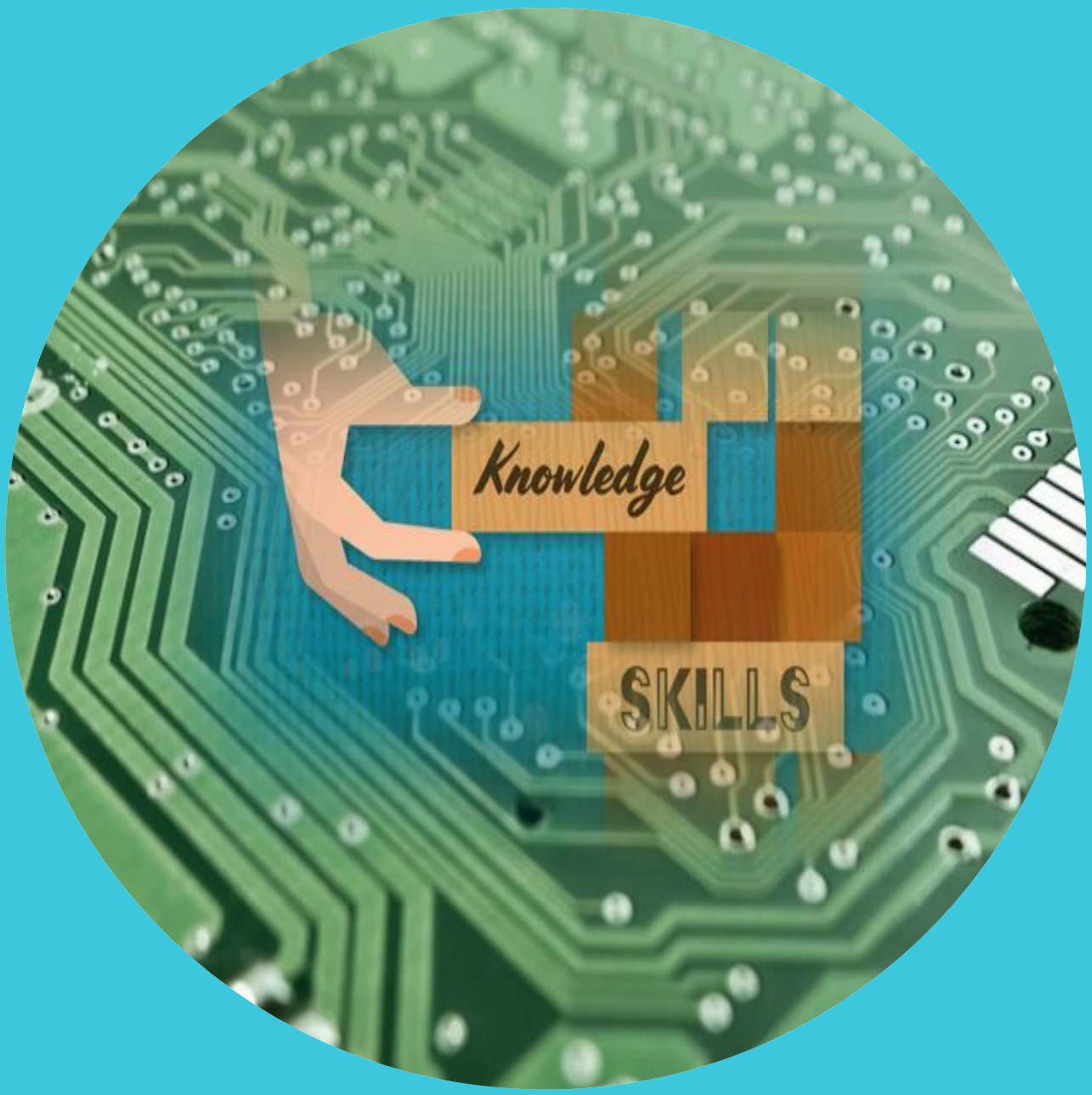

Electrical circuits

Key Stage 4 Revision Programme

Pupil Name	
Handbook Designed by	Dr K. Xu

Timetable and Assignment Submission

Timetable – Tutorials

Tutorial	Date	Time	Location
1 (Baseline assessment)		**15:00 – 16:00**	**Science 6**
2		**15:00 – 16:00**	**Science 6**
3		**15:00 – 16:00**	**Science 6**
4		**15:00 – 16:00**	**Science 6**
5		**15:00 – 16:00**	**Science 6**
6 (Final assessment)		**15:00 – 16:00**	**Science 6**
7 (Feedback)		**15:00 – 16:00**	**Science 6**

Timetable – Homework Assignments

Tutorial 1		
Tutorial 2		
Tutorial 3		
Tutorial 4		
Tutorial 5		

Contents

Course Rationale	**P4**
Glossary of Keywords	**P5**
Tutorial 2	**P6**
Tutorial 3	**P17**
Tutorial 4	**P28**
Tutorial 5	**P35**
Tutorial 7	**P46**

Course Rationale

This course will unravel the knowledge of electricity which is a broad topic in physics that frequently occurs in the GCSE exam. You often find this topic fairly difficult to grasp because it requires you to have solid foundation in numeracy and literacy skills. For you to accomplish mastery of the topics of the course, which include Ohm's Law, series and parallel circuits, and the VI characteristics of fixed resistor, you will focus on two aspects of learning building and improving your current toolbox.

Numeracy – focus on strategies designed based on the cognitive load theory to improve your working memory of equations (declarative), be confident in rearranging equations (procedural) and have affirm grasp on when to rearrange the equation to solve the problem.

Literacy – focus on literacy deals with the ability to extract mathematical concepts from word problems and additionally be able to utilise scientific vocabulary to describe/explain concepts verbally and pictorially.

This course commences with a baseline assessment of your current ability. From there we embark on four tutorials with a particular structure (please refer to content table for your reference).

To conclude the course you will take a final assessment that will be 30 minutes in length. This will build confidence in being able to alleviate exam stress and show how you have improved.

Subject Vocabulary (fill it in as you learn)

Word	Definition	In a sentence
Potential difference		
Current		
Charge		
Resistance		
Series circuit		
Parallel circuit		
Fixed resistor		
Ohm's Law		
Line of best fit		

Tutorial 2 Read and Construct Circuit Diagrams

2. Read and Construct Circuit Diagrams

Keywords: circuit, junctions, circuit symbols, series circuit, parallel circuit

Objectives this tutorial:

A) To identify common circuit symbols and describe their functions
B) To be able to read and describe circuit diagrams
C) To be able to draw circuit diagrams

NNJR:

1)What is the meaning of each symbol

2) How is symbol useful to us?

Objective A: Identify common circuit symbols and describe their functions

Symbols are useful to facilitate understanding.

Information

Within an electrical circuit, there are many electrical elements that could be added to a circuit to serve different purpose. For example, a bulb could be included to give out light. To simply these elements, circuit symbols are created to aid representation.

Below are examples of some common electrical circuit elements with their corresponding electrical circuit symbols. Circle the ones you already know and prepare to share with the person next to you. It would be even better if you could write down the function of the ones you know.

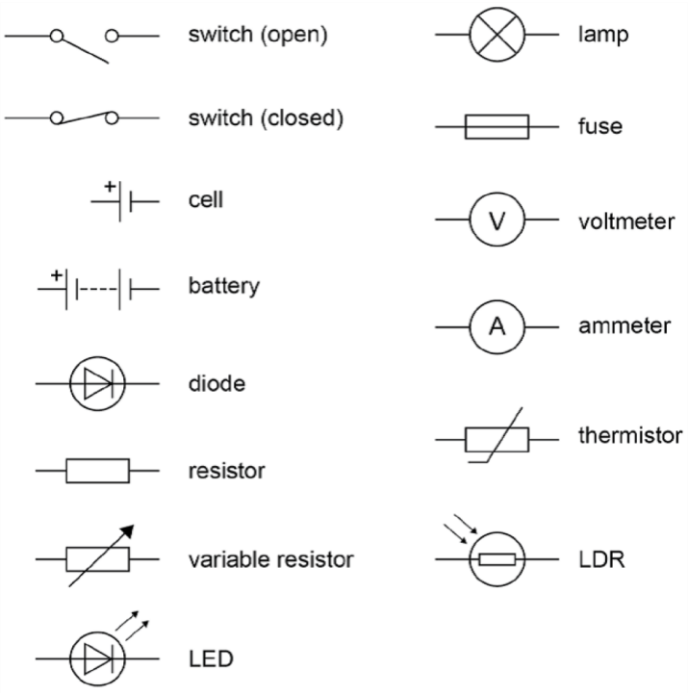

Practice A: Identify common circuit symbols and describe their functions

1) Quick firing exercise

Instructions:

You will be working in pairs. One of you will be A, and the other will be B.
You will have 1 minute to memorise the table as much as you can on your own.
Student A will test student B and see how many B can answer in 1 minute.

Example:
A: What is the symbol and the function of light bulb?
B will draw the symbol and answer the function verbally.
If you don't remember, just say pass.

Swap positions when time is up.

Symbols	Functions
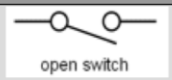	To stop current flowing
	To allow current flowing
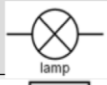	To give out light
	To add resistance to a circuit
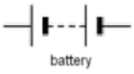	To provide potential difference (i.e. driving force for electrons to move)
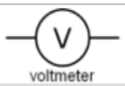	To measure potential difference across two points (voltage)
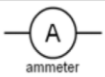	To measure current

2) Matching up exercise

Match the name of each electrical element with the correct symbol and function.

Light bulb	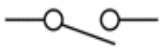	**To keep current flowing**
Resistor		**To add extra resistance of a circuit**
Closed switch	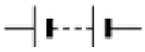	**To measure potential difference**
Voltmeter	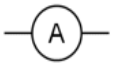	**To provide potential difference**
Battery		**To stop current flowing**
Open switch		**To measure current**
Ammeter		**To provide light**

Assessment A: Identify common circuit symbols and describe their functions

Find out what are missing and complete the table

Name	Symbol	Function
Light bulb		
Closed switch		
		To add extra resistance to a circuit
voltmeter		
		To provide potential difference

Objective B: To be able to read and describe circuit diagrams

A circuit diagram is a visual representation of an actual electrical circuit involving circuit symbols. It may look like this:

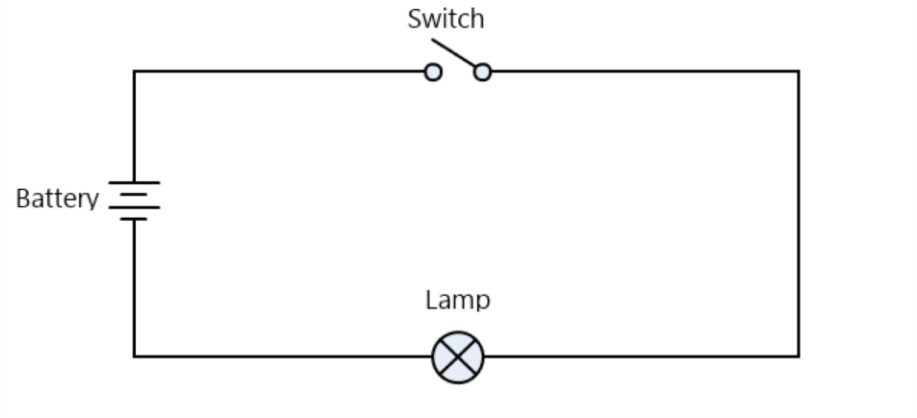

There are two types of circuit, series vs. parallel.

In series circuits, all elements are joined in **one closed loop**.
In parallel circuits, **multiple loops** are joined via **junctions** and electrical elements can spread out on each loop.

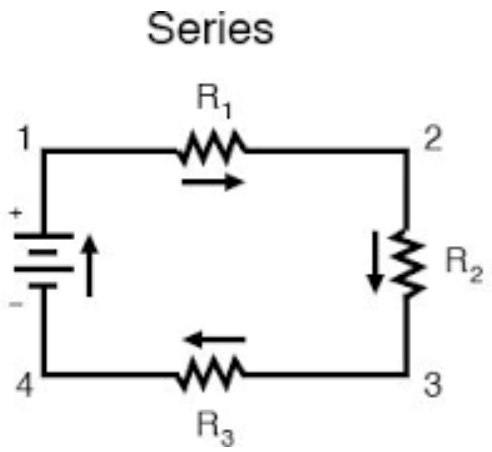

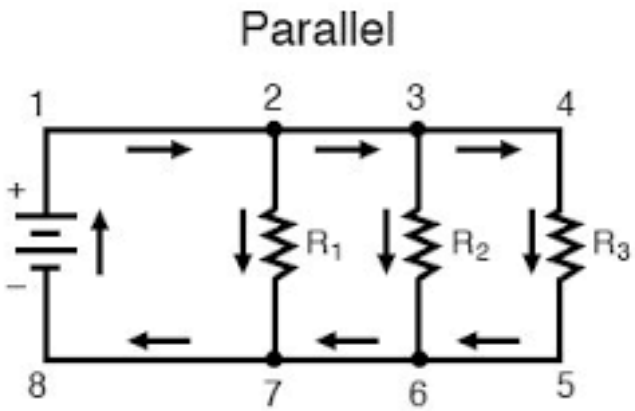

In order to be able to read and describe a circuit diagram, you need knowledge of circuit symbols and different types of circuits, which hopefully by now you will have had both. Now let's have a look at some examples.

Worked example 1 Describe this circuit, you should include information on the circuit components as well as the type of circuit.

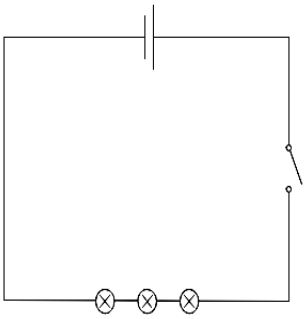

Step 1 Circle the circuit components on the diagram

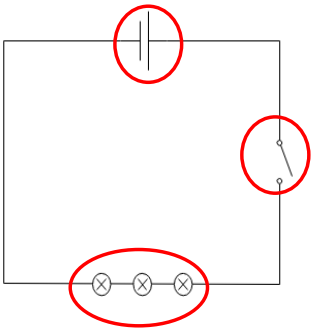

Step 2 Identify the components circled

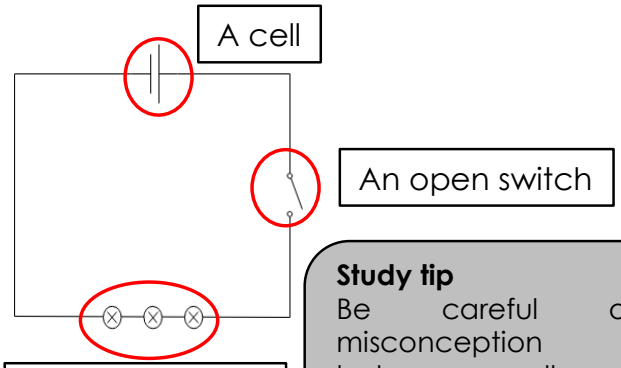

Study tip
Be careful of misconception between cell vs. battery and open switch vs. closed switch.

Step 3 Identify the type of circuit
There is only one loop in the diagram therefore it is a series circuit.

Step 4 Put it in a complete sentence
It is a series circuit consisted of one cell, one open switch and three light bulbs.

Practice B: To be able to read and describe circuit diagrams

Question 1 Describe this circuit, you should include information on the circuit components as well as the type of circuit.

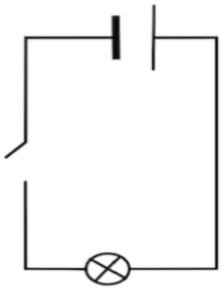

Worked example 2 (faded) Describe this circuit, you should include information on the circuit components as well as the type of circuit.

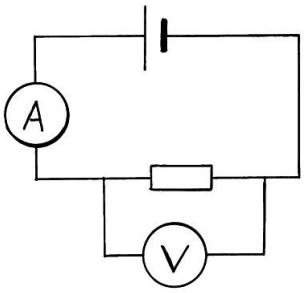

Step 1 Circle the circuit components on the diagram

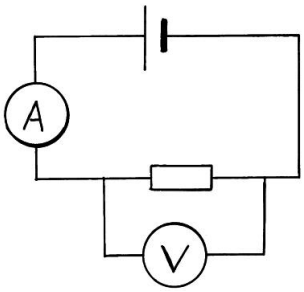

Step 2 Identify the components circled

A cell	An ammeter	A voltmeter	A resistor

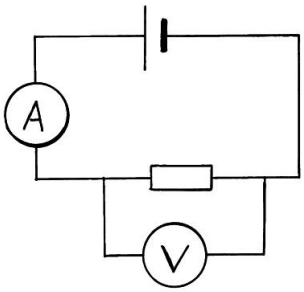

Step 3 Identify the type of circuit
There is only one loop in the diagram therefore it is a _____ circuit.

Study tip
Ammeter always connects in series and voltmeter connects in parallel. A voltmeter on its own does not count as a second loop

Step 4 Put it in a complete sentence
It is a _____ circuit consisted of a _____, a _____, an ammeter in _____ and a voltmeter in _____ across the resistor.

Practice B: To be able to read and describe circuit diagrams

Question 2 Describe this circuit, you should include information on the circuit components as well as the type of circuit.

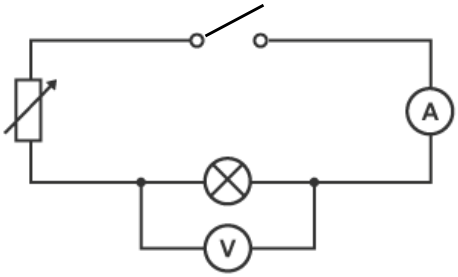

Worked example 3 (faded with self-explanation)

Describe this circuit, you should include information on the circuit components as well as the type of circuit.

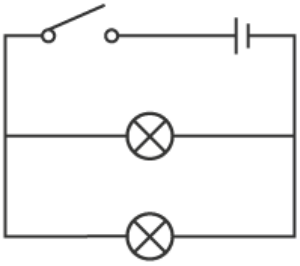

Step 1 Circle the circuit components on the diagram

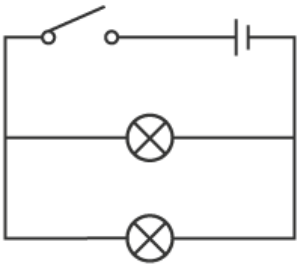

Step 2 Identify the components circled

A cell		

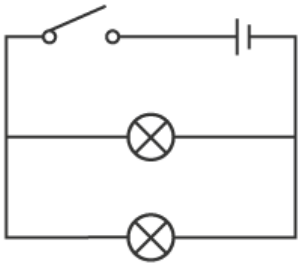

Step 3 Identify the type of circuit

This is a _____ circuit .

Question: How is that so?

Answer:

_____

_____

Step 4 Put it in a complete sentence

It is a _____ circuit consisted of _____, _____ and two light bulbs *in parallel*.

Question: ….'two light bulbs in parallel' – why state 'in parallel' again?

Answer:

_____

_____

Practice B: To be able to read and describe circuit diagrams

Question 3 Describe this circuit, you should include information on the circuit components as well as the type of circuit.

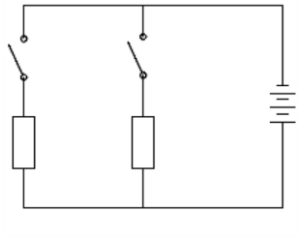

Assessment B: To be able to read and describe circuit diagrams

Describe this circuit, your answer should include information on the circuit components as well as the type of circuit.

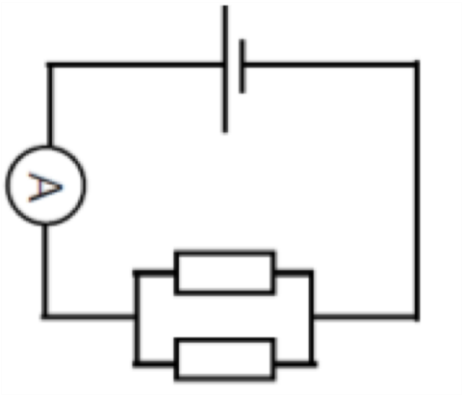

Objective C: To be able to draw circuit diagrams	**Practice C: To be able to draw circuit diagrams**
Worked example 1 Construct a series circuit containing a cell and two light bulbs. **Step 1** Highlight the circuit components and be aware of the number: Construct a series circuit containing <u>a cell</u> and <u>two light bulbs</u>. **Step 2** Highlight the type of circuit: Construct a <u>series circuit</u> containing <u>a cell</u> and <u>two light bulbs</u>. **Step 3** Connect everything together Because it is a series circuit, and we know there is only one loop in a series circuit, therefore the finished circuit would be something like this:	

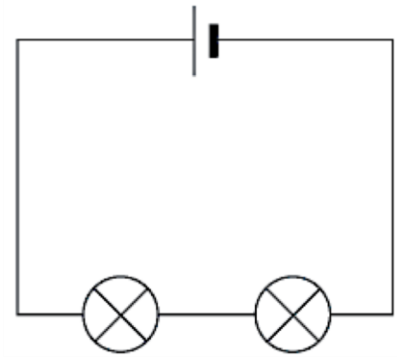

Worked example 2 (faded)
Construct a parallel circuit where two bulbs are joined in parallel with a cell and a switch which controls both of the lights.

Step 1 Highlight the circuit components and be aware of the number:
Construct a parallel circuit where two bulbs are joined in parallel with a cell and a switch which controls both of the lights.

Step 2 Highlight the type of circuit:
Construct a parallel circuit where two bulbs are joined in parallel with a cell and a switch which controls both of the lights.

Step 3 Connect everything together
Because it is a _____ circuit and it says two bulbs are in parallel, which means there are _____ loops joined together and each loop contains a _____. In addition, it also states that the switch controls both of the lights, which means the switch is on the main branch. It should be something like this:

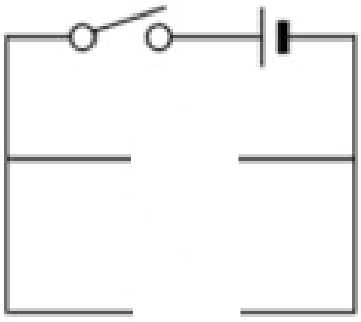

Study tip
Anything that sits on the 'main branch' means it is **shared** among all paths. Typical elements that are on the main branch are the power source, i.e. cell/battery and sometimes main switch.

Question 1 Construct a series circuit containing a cell, a light bulb and an open switch.

Question 2 Construct a parallel circuit containing a battery, a closed switch and three fixed resistors running in parallel to each other.

Worked example 3 (faded with self-explanation)
Construct a parallel circuit containing a cell, a closed switch, and three bulbs A, B, and C. Bulb B and C are in parallel and when the switch is open, only bulb C is affected.

Step 1 Highlight the circuit components and be aware of the number:

Step 2 Highlight the type of circuit:

Step 3 Connect everything together.
Because it is a parallel circuit, so there are at least two loops. Bulb A and the cell are sat on the main pathway.

Question: How do we know that 'bulb A and the cell are sat on the main pathway'?
A. Because it is a parallel circuit.
B. Because bulb A is the first.
C. Because it only says B and C are in parallel.
D. I don't know.

The tricky part of this question is where to put the switch.

Question: Why is that so?
Answer:
_____
_____

If the switch is on the main pathway, it would affect all three bulbs. If it is next to bulb B then when it opens B would be off. It is given in the text that the switch only controls bulb C. So this tells us that the switch is next to bulb C. So a complete circuit diagram would be something like this (label A, B, C on the Diagram below):

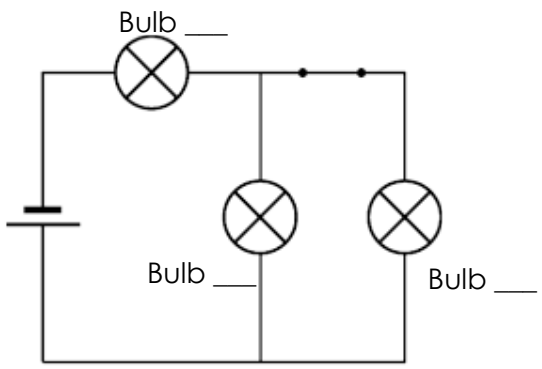

Question 3 Construct a parallel circuit containing a battery, a closed switch and three fixed resistors which one of them is in parallel to the other two.

Study tip
When draw a more complicated circuit diagram, always start with the easy part – in this question it would be 'light B and C are in parallel'. Then fill the rest in as you go.

Assessment C: Draw circuit diagram

You are given two bulbs, a battery, and a switch.

- Draw a circuit where the switch controls *both bulbs*
- Draw a circuit where the switch can only control *one of the bulbs*
- Draw a circuit where the switch controls *none of the bulbs*

Follow the steps from your practice. For this assessment, it is slightly trickier as you need to figure out the type of circuit in each question yourself ☺

Plenary

Components can be connected in electrical circuits in different ways.
Draw one line from each circuit symbol to the name of the component it represents.

Circuit symbol	Name of component
	cell
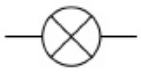	diode
	fuse
	lamp
	variable resistor

Tutorial 3 Ohm's Law Calculation

3. Ohm's Law Calculations
Keywords: current, potential difference, resistance, Ohm's Law

Objectives this tutorial:

A) To state Ohm's Law, its equation and the meaning of each term in the formula
B) To calculate potential difference, current and resistance in series circuits
C) To calculate potential difference and current in parallel circuits

NNJR:

1) Recall three circuit symbols, draw them in your workbook.
2) Write the function of each one down.

Objective A: To state Ohm's Law, its equation and the meaning of each term in the formula

Ohm's Law is one of the most important and basic laws of electrical circuit. It states that the **current** passing through a conductor between two point is *directly proportional* to the **potential difference** across the two point, given that the *temperature is constant*.

To order to understand Ohm's Law, we need to break it down into key words and know the meaning of each term.

Here is a list of key words: current, conductor, and potential difference. From your year 9 physics lessons on electrical circuit, you should have the knowledge of the definition of them.

Current is the rate of flow of electrical charges past a point.
Conductor is an object that allows current to pass through.
Potential difference is the difference in electrical potential between two points.

In addition to the words above, there are two additional important terms to be noted: *directly proportional* and *constant temperature*.

It is important to understand that *directly proportional* is different from 'as object A increases, object B also increases'. This is a common mistake made by many students. That sentence is only correct when '**at the same rate**' is added, i.e. 'as object A increases, object B also increases **at the same rate**'. This means, if A is increased by 1, B is also increased by 1; if A is increased by 10, so is B. Whereas if it's only A and B both increase, A could increase by 1 and B could increase by any number.

The second point to remember is '*constant temperature*'. This is very important as in later section, you will see that when temperature changes, for instance, in light bulbs they no longer obey Ohm's Law. So in other words, Ohm's Law is only valid when the temperature of that conductor remains the same throughout.

The usual mathematical equation to describe Ohm's Law is:

$$V = IR$$

Where *V* is the symbol for potential difference and has a unit of Volt (V), *I* stands for current and has a unit of Ampere (Amps, A), and *R* stands for resistance and has a unit of Ohms (Ω). The constant of proportionality in Ohm's Law means that the *R* in this relation is constant, independent of the current and potential difference.

Practice A: To state Ohm's Law, its equation and the meaning of each term in the formula

1. State Ohm's Law, you should also include the equation, what each term stands for and the unit.

2. Describe what is meant by 'directly proportional' and give an example.

3. The resistance of a fixed resistor always stays the same. Does the fixed resistor obey or disobey Ohm's Law? Explain your answer.

4. Why light bulbs are non-ohmic?

Assessment A: To state Ohm's Law, its equation and the meaning of each term in the formula

Choose the correct statement(s):

A. Current is the flow of charges past a point.

B. Potential difference is the power.

C. If it is a linear relationship between A and B on a graph paper, this means it's a direct proportionality.

D. For any ohmic electronic component, its resistance will always stay the same.

Objective B: To calculate potential difference, current and resistance in series circuits

A quick recall on series circuit: a type of circuit where all of the electronic components (loads) are in one loop.

Worked example 1 Calculate the potential difference on the voltmeter.

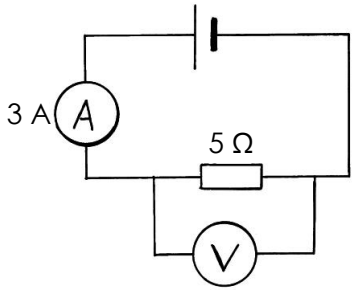

Step 1 Write down Ohm's Law equation

! = #$

Step 2 Substitute numbers in and calculate the final answer.

Since *I* stands for current and it is the reading on the ammeter which is 3 A, and *R* stands for resistance and it is the resistance of the fixed resistor which is 5 Ω.

! = #$
= 3 x 5
= 15 V

Step 3 Check units

Worked example 2 Calculate the resistance of the fixed resistor.

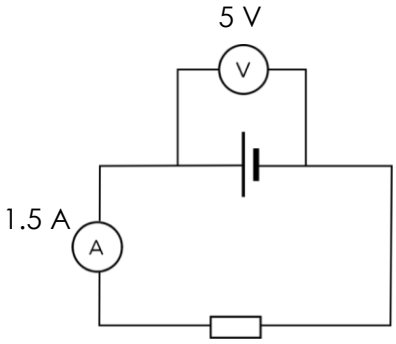

Step 1 Write down Ohm's Law equation

! = #$

Step 2 Rearrange the equation by putting *R* on the subject.

! = #$

Practice B: To calculate potential difference, current and resistance in series circuits

Question 1 The circuit below has a current of 4 A. Calculate its potential difference across the bulb.

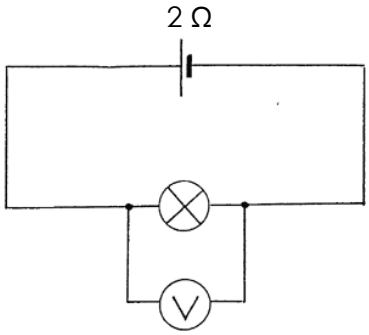

Question 2 What would be resistance of the variable resistor when the meters display these readings as shown in the diagram below.

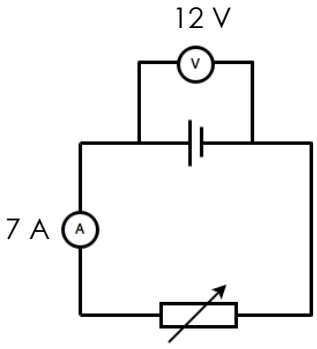

Each side divides *I*

$$V = IR$$

$$\frac{V}{I} = R$$

Rearrange R to the left hand side

$$R = \frac{V}{I}$$

Step 3 Substitute numbers in and calculate the final answer.

$$R = \frac{V}{I}$$

$$= 5 / 1.5$$

$$= 3.33\ \Omega$$

Study tip
Unless otherwise stated in the question, it's always a good practice to leave 2 decimal places.

Step 4 Check units

Worked example 3 (faded) Calculate the current past through the circuit shown below.

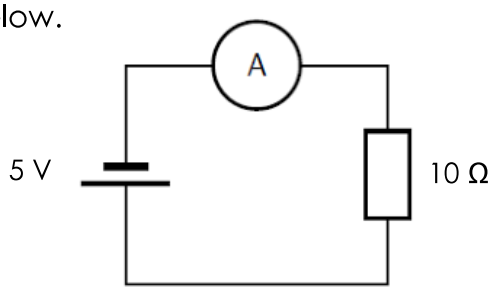

Step 1 Write down Ohm's Law equation

_____

Step 2 Rearrange the equation by putting *I* on the subject.

_____

_____

Step 3 Substitute numbers in and calculate the final answer.

$$I = \frac{V}{R}$$

=

=

Step 4 Check units

Question 3 Calculate the current past through the circuit when the switch is closed.

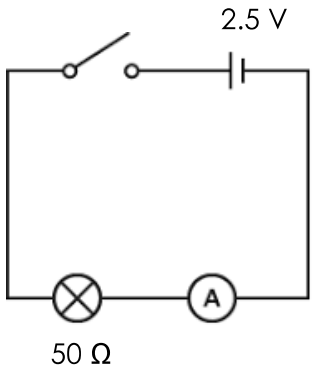

Worked example 4 (faded) Calculate the current past through the circuit shown below.

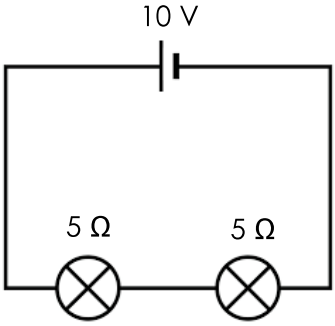

Step 1 Write down Ohm's Law equation

_____

Step 2 Rearrange the equation by putting *I* on the subject.

_____

_____

Step 3 When deal with a series circuit that has **more than one load**, the total resistance of all loads is the **sum** of the resistance of each load.

$$R_{total} = R_1 + R_2 + \ldots R_n$$

In this example

R total = 5 + 5

= _____

Step 4 Substitute numbers in and calculate the final answer.

$$I = \frac{V}{R}$$

=

=

Step 5 Check units

Question 4 Calculate the current past through the circuit shown below.

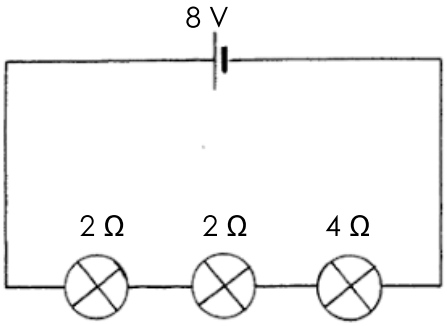

Worked example 5 (faded with self-explanation) Calculate the total resistance of the circuit shown below if it has a total current of 1 A.

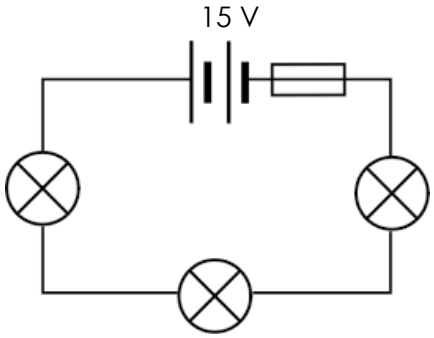

Step 1 Write down Ohm's Law equation

_____

Step 2 Rearrange the equation by putting *R* on the subject.

_____

_____

Question: Why put *R* on the subject?
Answer:

_____

_____

Step 3 Substitute numbers in and calculate the final answer.

Question: If the resistance of the fuse is almost zero and the three bulbs are identical, what would be the resistance of each bulb?

A. 5 V
B. 10 V
C. 15 V
D. 3 V

Study tip
The resistance of a fuse box is negligible – it is almost like a wire.

Step 5 Check units

Question 5 Calculate the resistance of each bulb if the total current of the circuit is 2 A and the bulbs are all identical. You should leave your answer to 3. d. p.

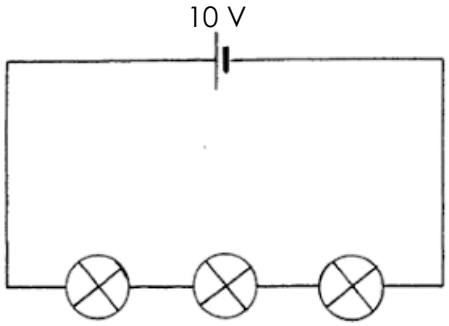

Worked example 6 (faded with self-explanation) Calculate the p.d. across the bulb.

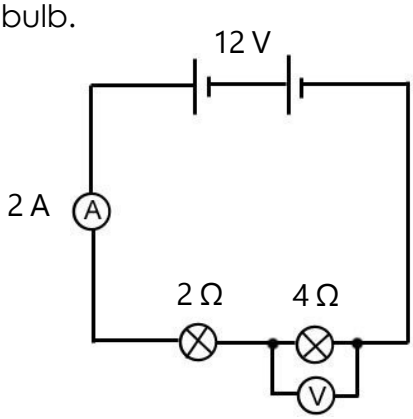

Study tip
p.d. is short for potential difference.

When you deal with a series circuit that has more than one load, and you are asked to calculate specific p.d. across a load, or resistance of a particular load, instead of asking for the total p.d. or total resistance. You need to remember three rules:

1. In series circuit the total resistance of all loads is the **sum** of the resistance of each load.

$$R_{total} = R_1 + R_2 + \ldots R_n$$

2. In series circuit the total p.d. across all loads is the **sum** of the p.d. across each load.

$$V_{total} = V_1 + V_2 + \ldots V_n$$

3. In series circuit current past by any point is the **same**.

$$I_{total} = I_1 = I_2 = \ldots = I_n$$

Step 1 Write down Ohm's Law equation

_____

Question: Is there a need to rearrange the equation, why?
Answer:

_____

_____

Step 3 Substitute numbers in and calculate the final answer.

V = IR
= 2 x 4
= _____

Question 6 Calculate the p.d. across the bulb.

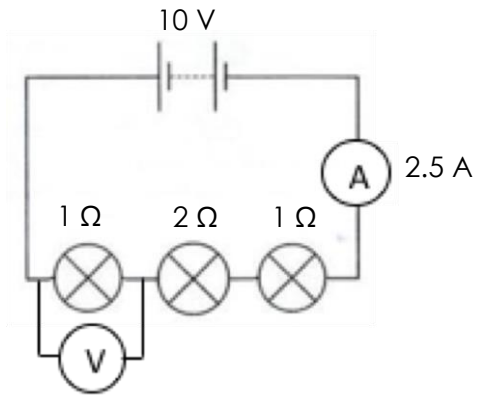

Challenge: How would you calculate the p.d. across the same bulb if the circuit diagram looks like this (so the resistance of the bulb is unknown):

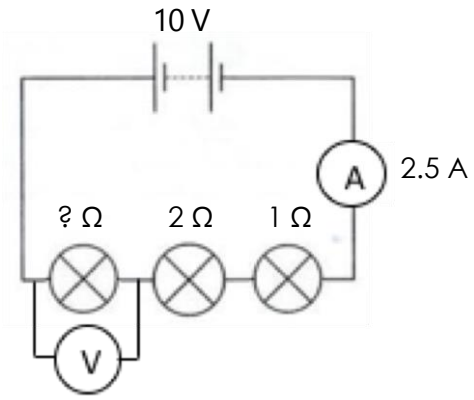

Question: Why it is 2 x 4 instead of 2 x 2, or 2 x 6 ?
Answer:

_____
_____
_____
_____

Step 4 Check units

Assessment B: To calculate potential difference, current and resistance in series circuits

If the two resistors are identical. Create as many equations as possible on the relations among these meters in the circuit diagram shown below.

Hint: the three rules in series circuits

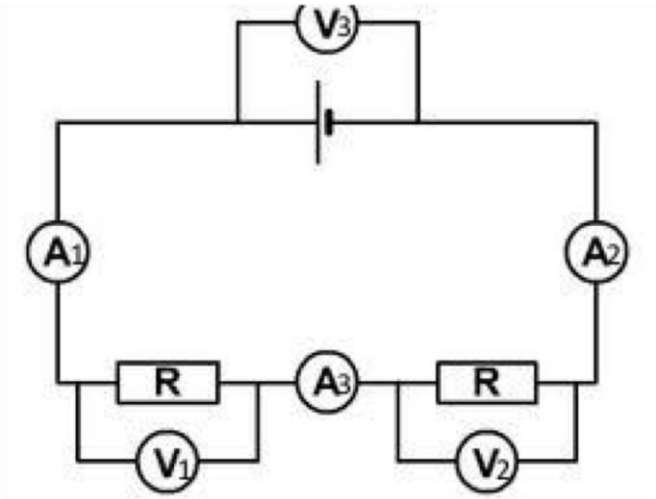

Objective C: To calculate potential difference and current in parallel circuits

Similarly to series circuit, there are rules to calculate potential difference and current in parallel circuits:

1) The potential difference across any load is always identical

$$V_{total} = V_1 = V_2 = \ldots = V_n$$

2) The total current is the sum of the current past any point.

$$I_{total} = I_1 + I_2 + \ldots + I_n$$

At the current level, it is not a requirement to know how to calculate resistance in parallel circuit. However if you are interested to know, here is the formula:

$$\frac{!}{"}_{total} = \frac{!}{"}_{1} + \frac{!}{"}_{2} + \ldots + \frac{!}{"}_{n}$$

Worked example 1 Calculate the potential difference on voltmeter 2.

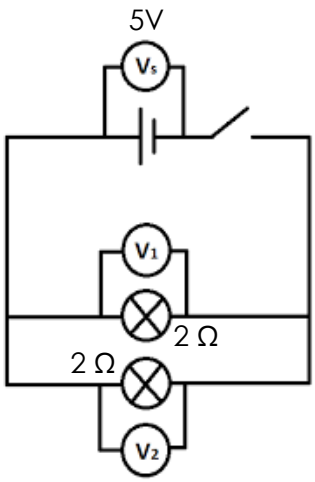

Step 1 Recall rules on calculating potential difference in parallel circuit

$$V_{total} = V_1 = V_2 = \ldots = V_n$$

Therefore, there is no need to figure out what the current/resistance are, simply apply the formula

$V_{total} = V_1 = V_2 = \ldots = V_n$
$V_{total} = 5V$
Thus, $V_2 = 5V$

Step 2 Check units

Worked example 2 (faded) Calculate the potential difference on voltmeter 3.

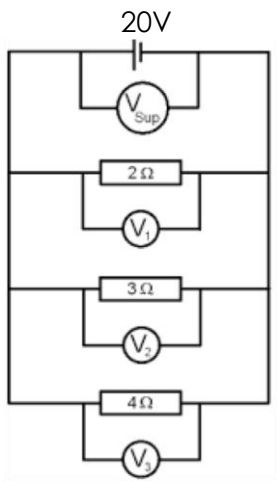

Step 1 Recall rules on calculating potential difference in parallel circuit

_____

Practice C: To calculate potential difference and current in parallel circuits

Question 1 Calculate the potential difference on the voltmeter.

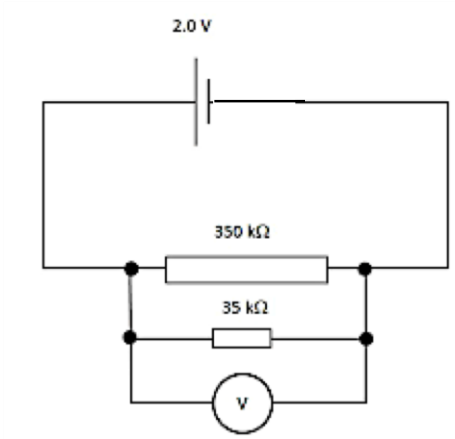

Question 2 Calculate the potential difference on voltmeter 1.

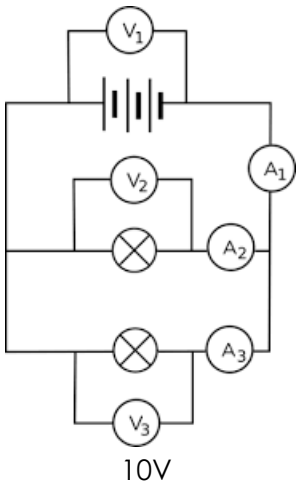

Step 2 Work out the reading on voltmeter 2:

_____

_____

Worked example 3 (self explanation) Calculate the current on ammeter 2.

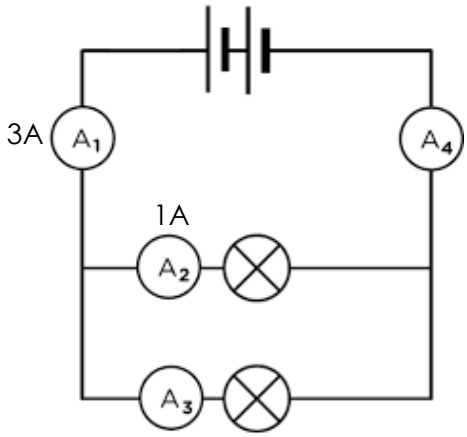

Step 1 Recall rules on calculating current in parallel circuit

_____

Step 2 Identify which ammeter represents the total current which one represents the sub current

In this diagram, ammeter A2 and A3 are in parallel to each other, explain why.

_____

_____

What is the relation between the readings on ammeter A1 and A4?

A. A1 is greater than A4
B. A1 is less than A4
C. A1 equals A4
D. A1 + A4 = A2 + A3

Step 3 Therefore, A2 = _____

Step 4 Check units

Question 3 Calculate the current on the ammeter 4. It is known that all three bulbs are identical.

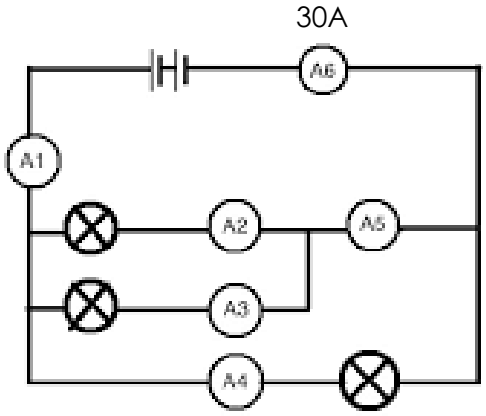

Assessment C: To calculate potential difference and current in parallel circuits

Calculate the reading on the following ammeters: A1, A4 and A5, and the resistance of bulb A, B, and C

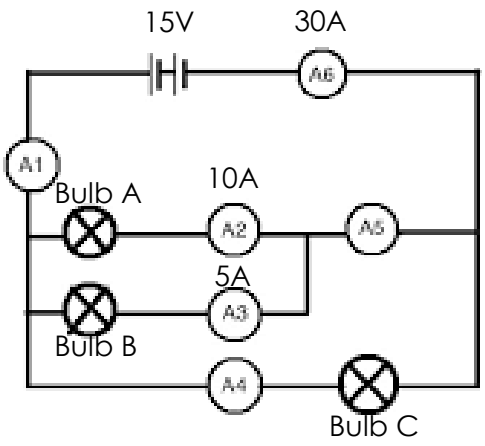

Plenary

True or false? Correct the wrong statement.

1. The total potential difference of a parallel circuit is greater than it across any load in that circuit.

2. The current stays the same throughout a parallel circuit.

3. In a series circuit, the resistance of every load adds up to the total resistance.

4. In a series circuit, the total current is the sum of individual current past any point.

Tutorial 4 Plotting VI characteristic graph of fixed resistor

4. Plotting the VI characteristic graph of a fixed resistor
Keywords: independent variable, dependent variable, control variable, Ohm's law, best fit

Objectives this tutorial:

A) To describe the ohmic property of fixed resistor
B) To understand the basics of graph plotting
C) To plot the VI characteristic graph of a fixed resistor

NNJR:

What are independent, dependent and control variables?

Challenge: An investigation is aimed to measure the effect of water on the
height of the plant. Name the three variables for this practical.

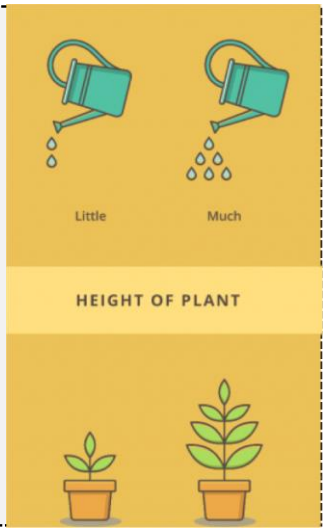

Objective A: To describe the ohmic property of fixed resistor

In tutorial 2, we have learnt what Ohm's Law is and its equation. It is important to remember that the temperature needs to remain constant for it to be valid. There are examples of electrical circuit component which the temperature could change, for instance, light bulb. As it is switched on, it becomes hotter over time. For such components, they are *non ohmic*. On contrary, there are other electrical components which the temperature stays the same throughout the whole course. A typical example is fixed resistor. The **current** passing through a fixed resistor between two point is *directly proportional* to the **potential difference** across the two point,.

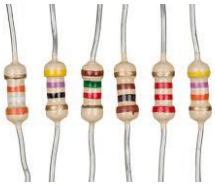

Practice A: To describe the ohmic property of fixed resistor

1. State Ohm's Law and the formula.

2. Describe the difference between ohmic circuit components and non ohmic circuit components.

3. Explain the following statement using Ohm's Law: The resistance of light bulb increases over time.

Assessment A: To describe the ohmic property of fixed resistor

Choose the correct statement(s):

A. If an object is ohmic, it means the current past through between two points increases as the potential difference across the two points increases.

B. Light bulbs are non ohmic which means they do not follow Ohm's Law.

C. The resistance of all fixed resistors are identical because they are ohmic.

Objective B: To understand the basics of graph plotting

Plotting graph is one of the skills knowledge in science which is frequently tested in exams. Quite often, you need to plot a graph based on a result table. In order to successfully plot an accurate graph, you need the following skill:

1. To be able to read a table
2. To be able to transfer data from a table to a graph paper
3. To be able to draw a best fit line/curve

N.B. How to read off from a graph and perform subsequent calculations are included in the next tutorial.

Practice B: To understand the basics of graph plotting

Worked example 1 Identify the independent and dependent variables from this table.

Voltage	Current
1 V	1 mA
2 V	2 mA
3 V	3 mA
4 V	4 mA
5 V	5 mA

Step 1 Remember independent variable is what you *change* and normally goes in column 1. On the other hand, dependent variable is what you *measure* and goes in column 2.

Step 2 Identify the two variables.

Independent variable	Dependent variable

Voltage	Current
1 V	1 mA
2 V	2 mA
3 V	3 mA
4 V	4 mA
5 V	5 mA

Question 1 work out which is independent and which is dependent variable

Voltage (V)	Current (A)
4.3	0.3
4.4	0.8
4.5	1.6
4.6	2.58
4.7	3.0

Worked example 2 (faded) Plot data from the table below:

Voltage	Current
1 V	1 mA
2 V	2 mA
3 V	3 mA
4 V	4 mA
5 V	5 mA

Step 1 Identify which is independent and which is dependent variable

variable

variable

Voltage	Current
1 V	1 mA
2 V	2 mA
3 V	3 mA
4 V	4 mA
5 V	5 mA

Step 2 Identify which set of data aoes on which axis

Dependent Variable goes on the y-axis

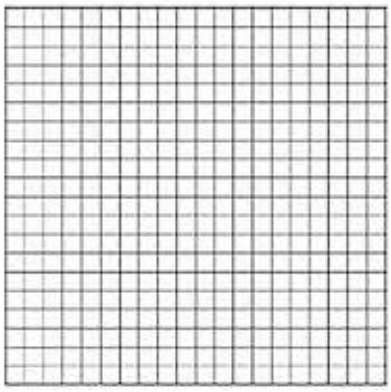

Independent Variable goes on the x-axis

Step 3 Draw two straight lines representing two axis and label them

Question 2 Plot data from the table below

Voltage, V (volts)	Current, I (amps)
0.5	0.1
1.0	0.2
1.5	0.3
2.0	0.4
2.5	0.5
3.0	0.6

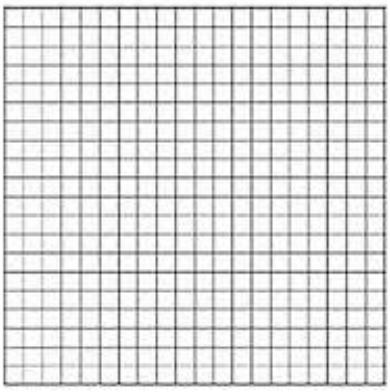

Current / mA

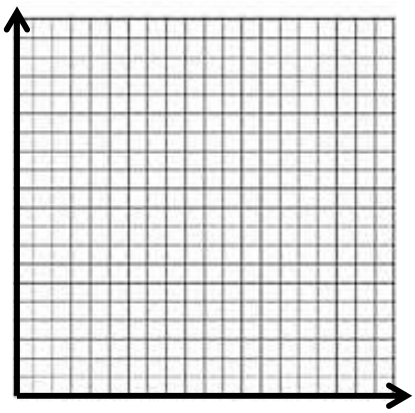

Voltage / V

Step 3 Divide each axis accordingly and add number next to the scales

Current / mA

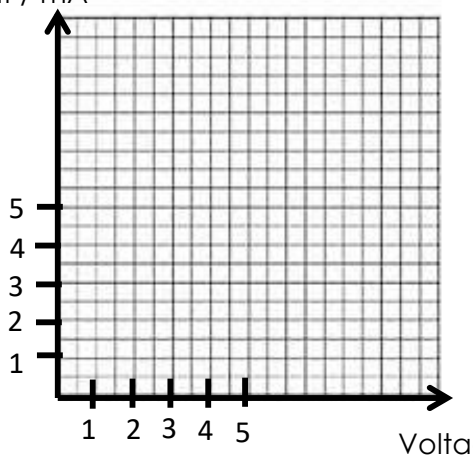

Voltage / V

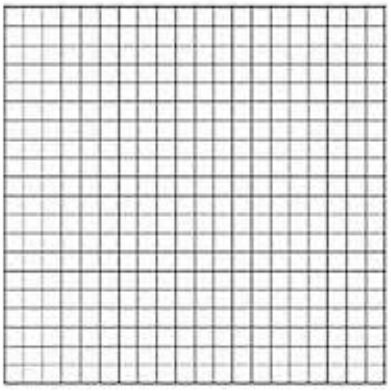

Step 4 Plot the points

Current / mA

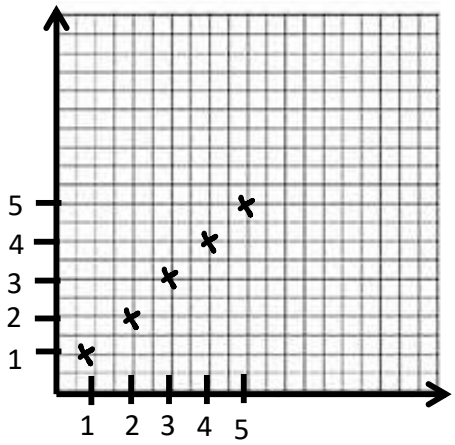

Voltage / V

Worked example 3 (self-explanation) Draw a line of best fit

A line of best fit is a line that goes through most of the points, but not all points necessary.

In this example, all points line up perfectly. A best fit will look like this:

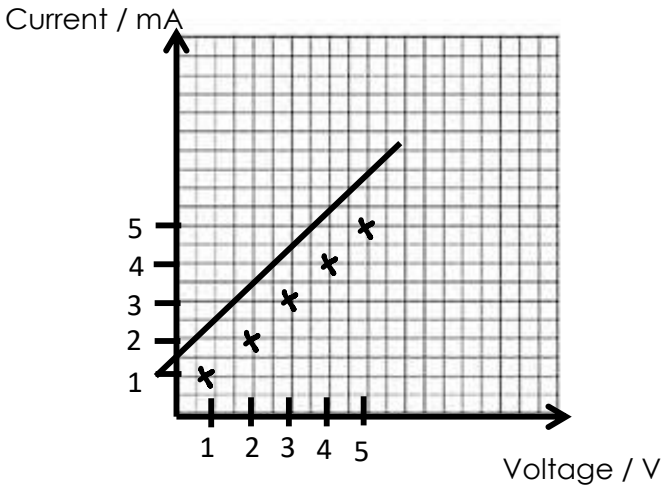

Question: Suggest why sometimes a best fit line cannot go through all of the points?
Answer:

_____

_____

Question 3 Draw a line of best fit and circle the abnormalies.

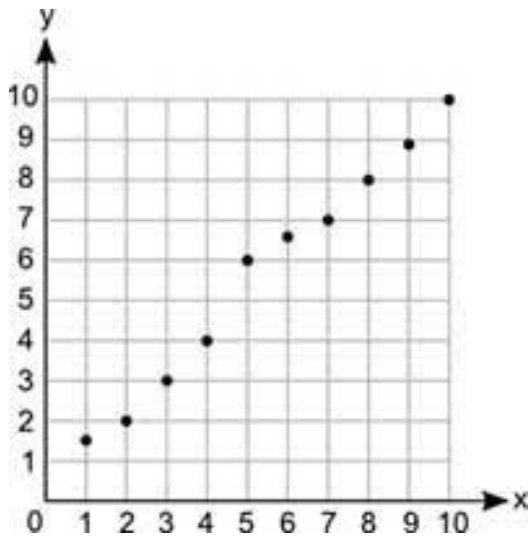

Assessment B: To understand the basics of graph plotting

Plot a graph based on the table below.

Voltage (V)	Current (A)
2	0.1
4	0.2
6	0.3
8	0.4
10	0.5
12	0.6

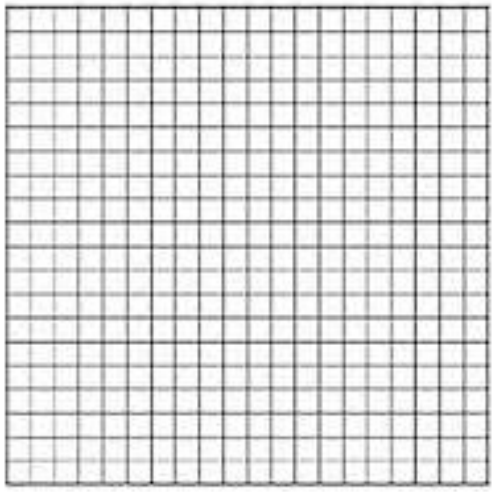

Objective C: To plot the VI characteristic graph of a fixed resistor

Worked example 1 (faded) A student is trying to find out the resistance of a fixed resistor in the circuit diagram shown below. After recording the voltmeter readings and the ammeter reading, he produced the following table. Plot a graph using the data from this table and draw a line of best fit.

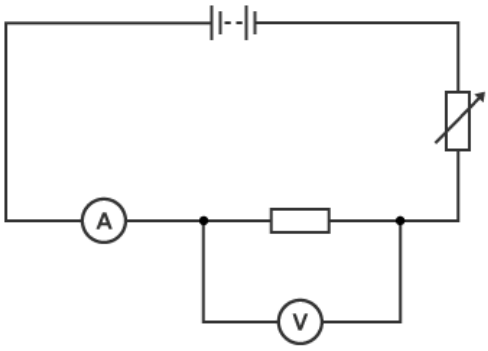

Voltage (V)	Current (I)
0.2	0.002
0.4	0.006
0.6	0.010
0.8	0.014

Step 1 Identify the two variables
Independent variable is : _____
Dependent variable is: _____

Step 2 Determine what goes on each axis
Voltage goes on _____ axis, and current goes on _____ axis.

Step 3 Plot data and label the graph

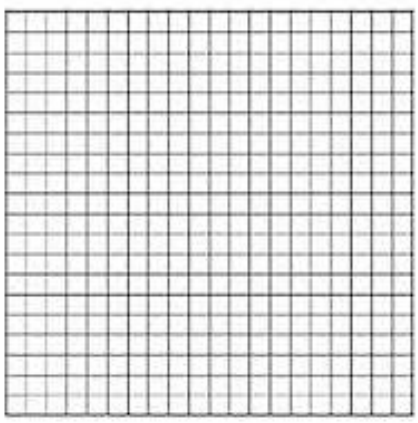

Step 4 Draw the line of best fit

Practice C: To plot the VI characteristic graph of a fixed resistor

Question 1 Plot the VI characteristic graph of a fixed resistor with result table shown below.

Potential Difference (V)	Current (A)
2	0.21
4	0.38
6	0.57
8	0.84
10	0.99

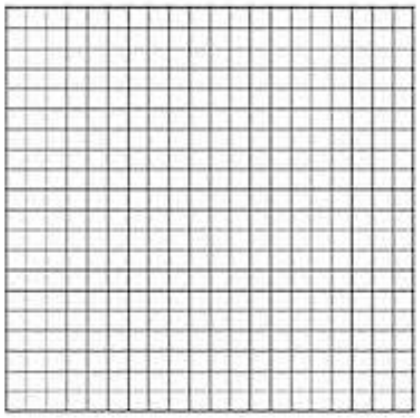

Assessment C: To calculate potential difference and current in parallel circuits

Plot a VI graph of a fixed resistor in the circuit diagram shown below.

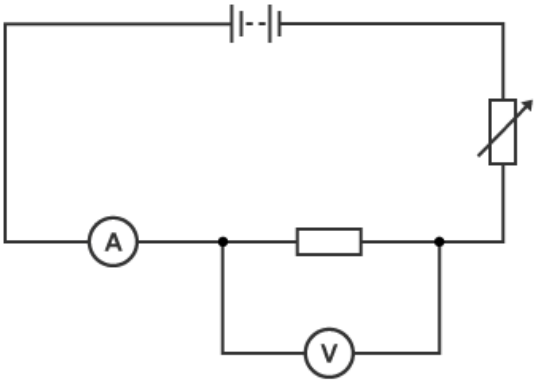

Voltmeter Observed (V)	Ammeter Observed (A)
0.1	0.3
0.2	0.7
0.3	1.1
0.4	1.5
0.5	1.9

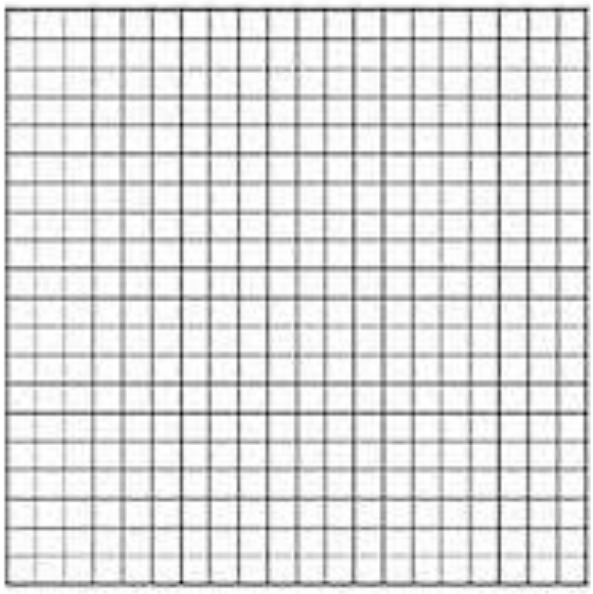

Plenary

Spot the errors on this graph

Voltage	Current
1 V	1 mA
2 V	2 mA
3 V	3 mA
4 V	4 mA
5 V	5 mA

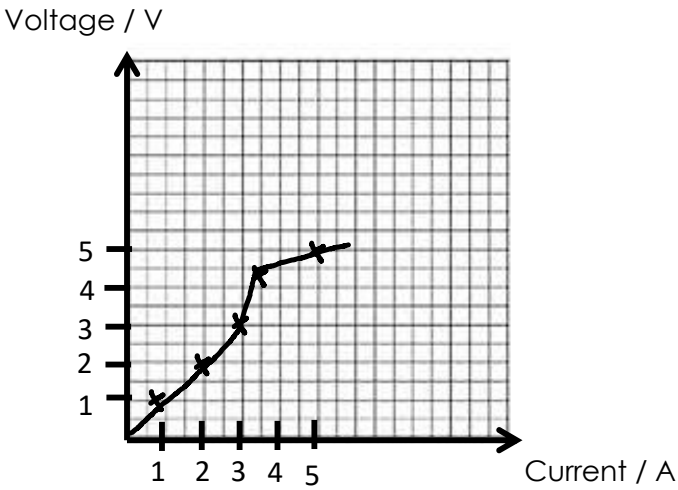

Tutorial 5 Interpreting VI graph of fixed resistor

5. Interpreting the VI characteristic graph of a fixed resistor
Keywords: independent variable, dependent variable, control variable, Ohm's law, best fit

Objectives this tutorial:

A) To describe data from a graph
B) To calculate resistance from a VI graph
C) To explain a VI graph

NNJR:
Matching up

As X increases Y decreases

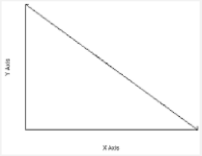

X and Y are direct proportional to each other

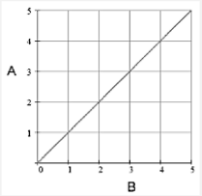

X and Y are inversely proportional to each other

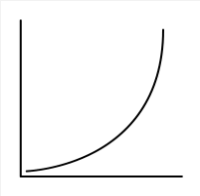

As X increases Y increases

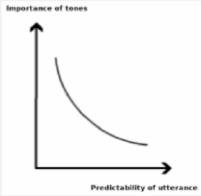

Objective A: To describe data from a graph

There are several types of graphs which can be commonly seen in science, for instance, line graph, bar chart, pie chart and etc. When you plot a graph you need to be careful what message you would like to present and the choice of the type of graph is dependent upon it. In this topic we will be focusing on line graph or line plot, as this is one of the most commonly used graphs.

To describe a graph, it is important to follow do the steps below:

1. State what the graph is for – purpose of it.

2. Identify the two variables and relate each to its axis.

3. Describe the relation between the two variables

4. Give specific numbers as an example (especially when you are asked to 'use the data from the graph'

Practice A: To describe data from a graph

Worked example 1 A student investigates the effect of time on how far a car drives. A line plotted from his investigation is shown below. Describe what this graph shows.

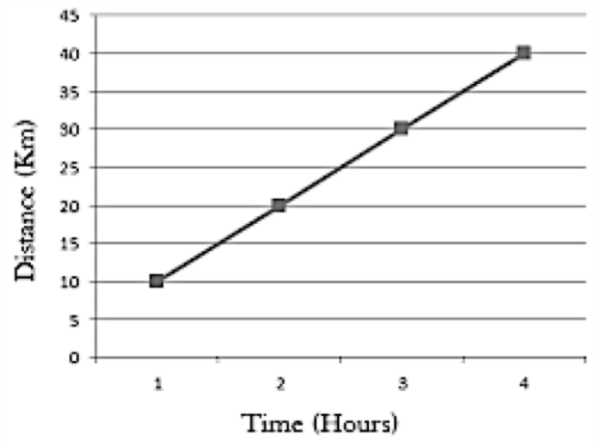

Step 1 State the purpose of the graph
This is a graph showing the effect of time on how far a car drives.

> **Study tip**
> The purpose is often stated in the question, you just need to reiterate it.

Step 2 Identify the two variables and relate to the axes
The independent variable is the time in hours which in shown on the x-axis, the dependent variable is the distance in km which is on the y-axis.

> **Study tip**
> Remember the independent variable is on the x-axis and dependent variable is on the y-axis.

Step 3 Describe the relation between two variables
As shown on the graph, as time increases, the distance travelled also increases.

Step 4 Use specific number from the graph as an example
At time = 1 hour, the distance is 10 km; at time = 4 hour, the distance is 40 km.

> **Study tip**
> It is often wise to state the starting point and the finishing point.

Question 1 A student investigates the effect of time on how fast a car drives. A line plotted from his investigation is shown below. Describe what this graph shows.

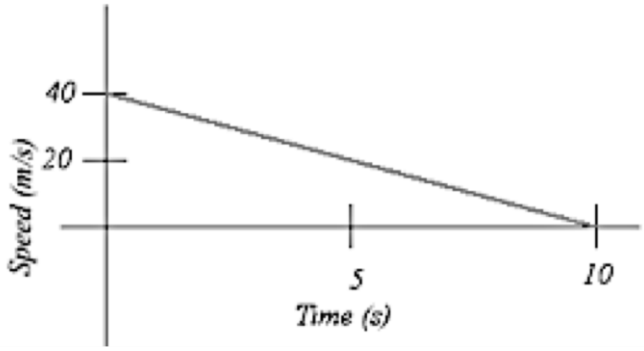

Worked example 2 (faded) A student investigates the effect of time on how far a car drives. A line plotted from his investigation is shown below. Describe what this graph shows.

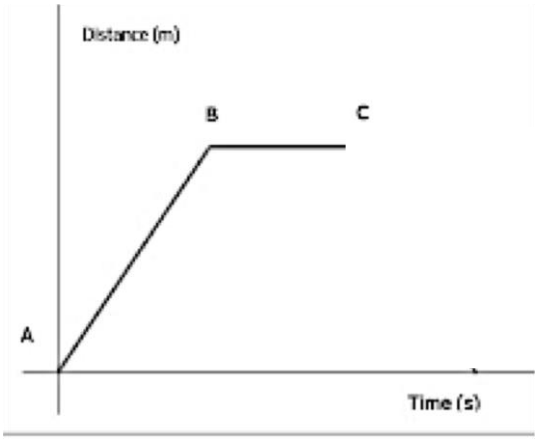

Step 1 State the purpose of the graph
This is a graph showing

_____

Step 2 Identify the two variables and relate to the axes
The independent variable is _____ which in shown on the _____ -axis, the dependent variable is _____which is on the _____-axis.

Step 3 Describe the relation between two variables
As shown on the graph, as time increases from point A to B, the distance _____. Between point B to C, the car _____ as the increment of distance is zero.

> **Study tip**
> When there is a change in relation between the variables, it is important to describe each stage.

Step 4 Use specific number from the graph as an example
As shown in step 3, you have already mentioned point A, B and C. So there is no need to repeat again here.

Question 2 A student investigates the effect of time on how far he walks. A line plotted from his investigation is shown below. Describe what this graph shows.

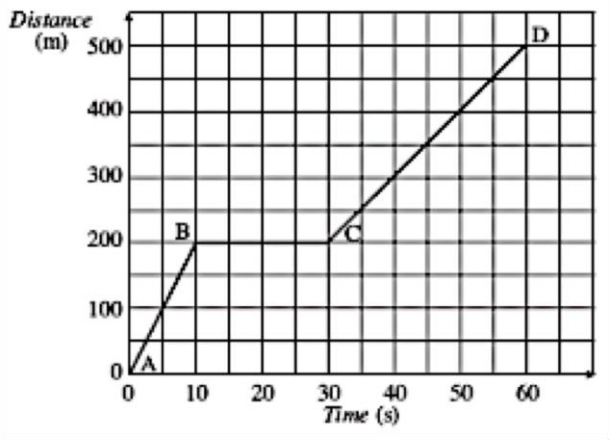

Worked example 3 (self explanation) A student investigates the effect of potential difference (voltage) on the current flow through a fixed resistor. The data is plotted as shown below. Describe what you can find out from this experiment.

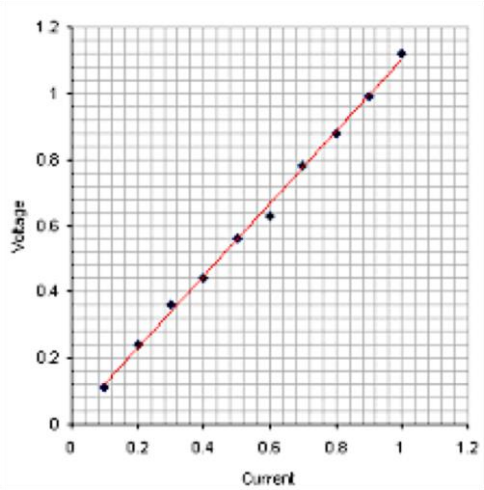

Step 1 State the purpose of the graph

_____

_____

Step 2 Identify the two variables and relate to the axes

_____

_____

Step 3 Describe the relation between two variables using data from the graph

_____

_____

_____

Question: What do we call the relation between two variables if the line goes through the origin?

A. As X increases Y also increases
B. Inversely proportional
C. Proportional

Question: How is this related to Ohm's law?

_____

Question 3 A student investigates the effect of potential difference (voltage) on the current flow through a fixed resistor. The data is plotted as shown below. Describe what you can find out from this experiment.

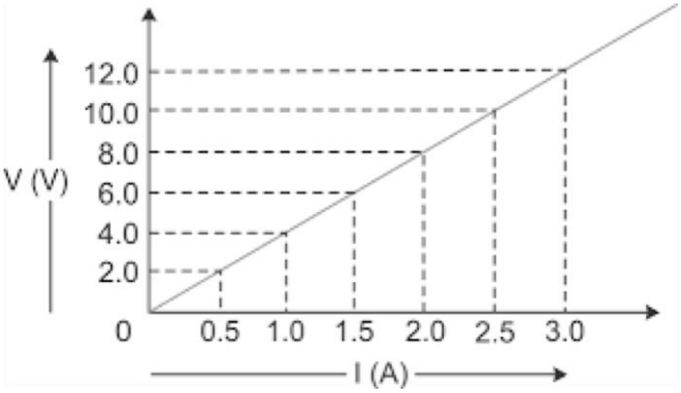

Assessment A: To describe data from a graph

A student investigates the effect of potential difference (voltage) on the current flow through a fixed resistor. The data is plotted as shown below. Describe what you can find out from this experiment.

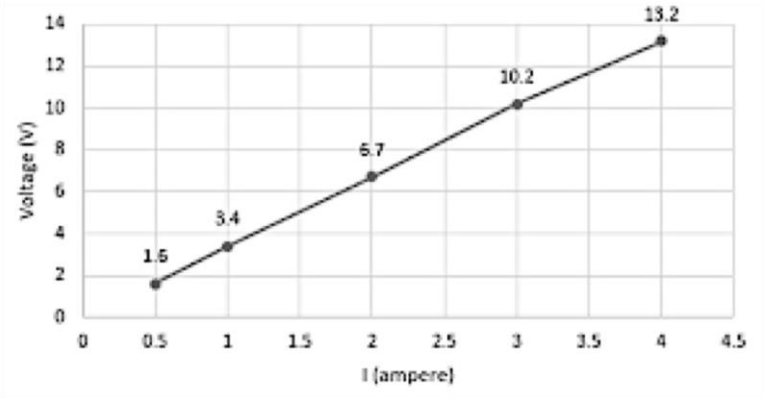

Objective B: To calculate resistance from a VI graph

Ohm's Law states that V = IR, if we rearrange it by having R as the subject, we have R = V / I, in other words, it is asking us to calculate the slope of a VI graph.

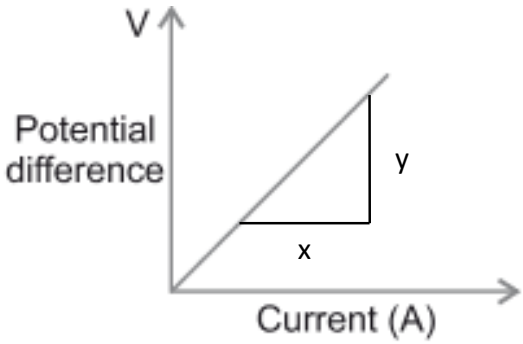

Practice B: To calculate resistance from a VI graph

Objective B: To calculate resistance from a VI graph	Practice B: To calculate resistance from a VI graph
Worked example 1 Using a ruler, calculate the slope of this graph. 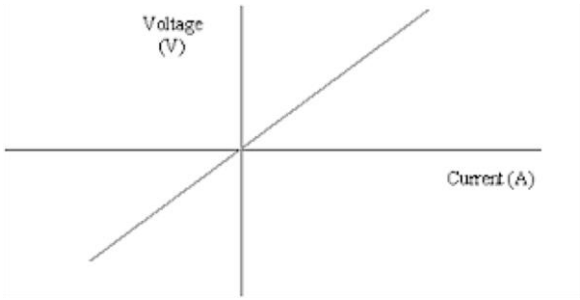 **Step 1** Take a random point along the slope and draw a vertical line down from that point. 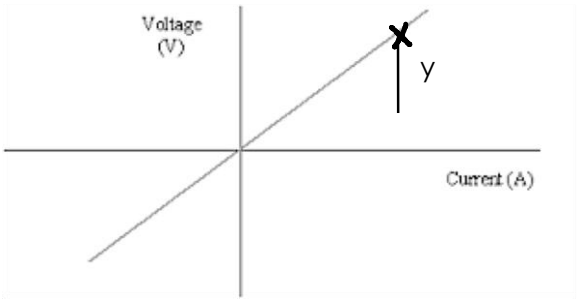 **Step 2** Connect the vertical line horizontally back to the slope. 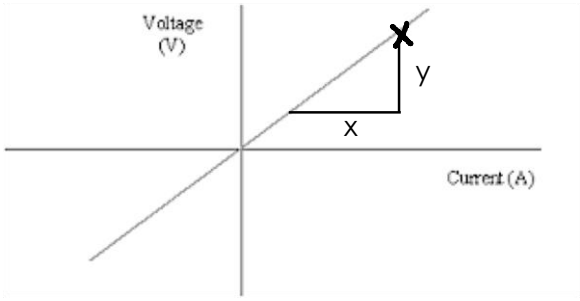 **Step 3** Using a ruler, measure the distance y and x. Put them into the equation: ! "#$%= ' / (	**Question 1** Using a ruler, calculate the slope of this graph. 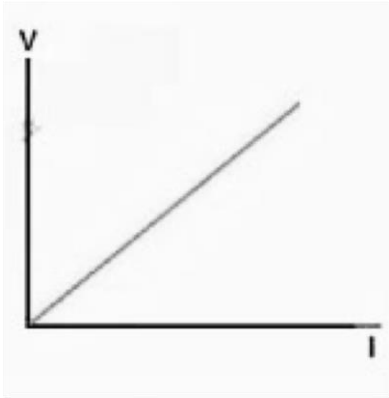

Quite often, you don't need a ruler to measure because axes are scaled.

Worked example 2 (faded) Work on the gradient of this graph

> **Study tip**
> Gradient is the same as slope.

Step 1 Take a random point along the slope and draw a vertical line y, down from that point.

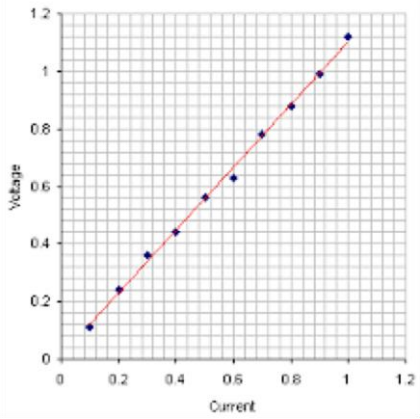

Step 2 Connect the vertical line horizontally back to the slope and name it x.

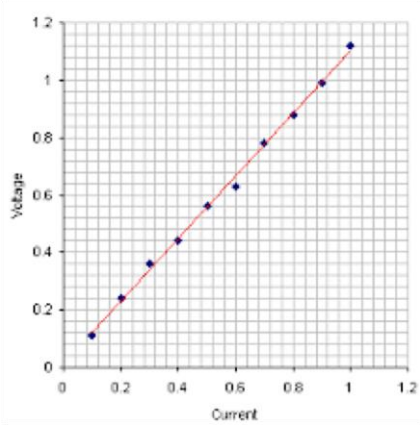

Step 3 read off from the graph the distance of y and x.

Step 4 Put them into the equation:

! "#$%= (((

Worked example 2 (self explanation) Work out the resistance of the resistor from this grap

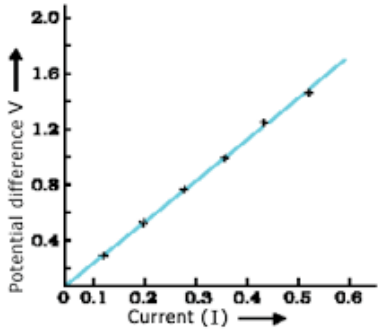

Step 1 Take a random point along the slope and draw a vertical line y, down from that point.

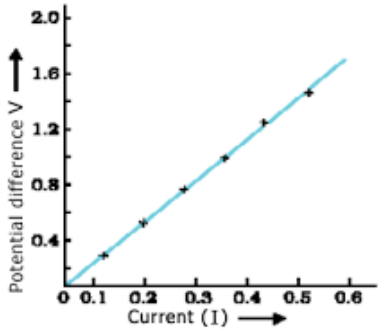

Step 2 Connect the vertical line horizontally back to the slope and name it x.

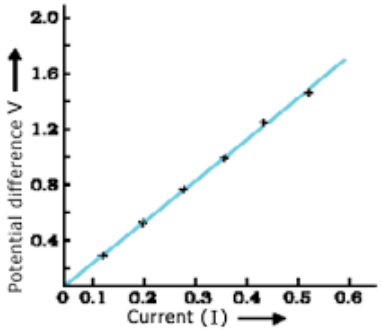

Step 3 read off from the graph the distance of y and x.

Step 4 Put them into the equation:

$$Slope = \frac{y}{x}$$

Step 5 Work out the resistance

Question: Why is the slope same as the resistance?

Answer:

_____

_____

Question 3. Calculate the resistance of resistor A and B and comment on the value.

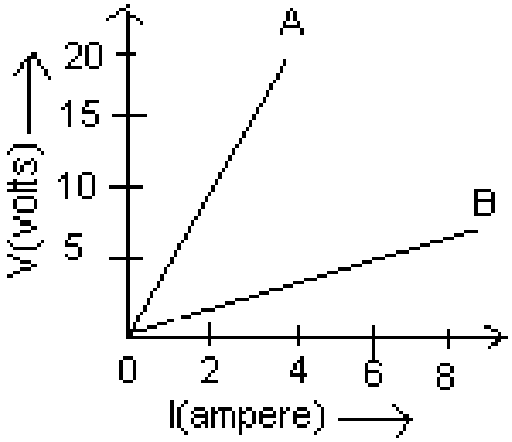

Assessment B: To calculate resistance from a VI graph

A student investigates the effect of potential difference (voltage) on the current flow through a fixed resistor. The data is plotted as shown below. Work out the resistance of this resistor.

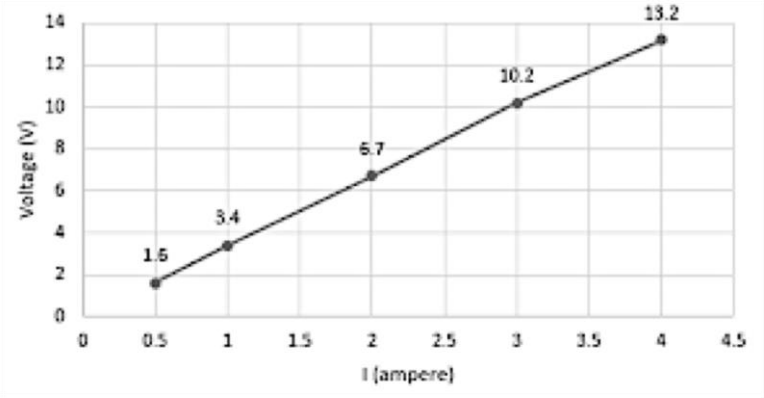

Objective C: To explain a VI graph

Worked example 1 A student investigates the effect of potential difference (voltage) on the current flow through a fixed resistor. The data is plotted as shown below. Explain, using this graph, why a fixed resistor is considered to be ohmic.

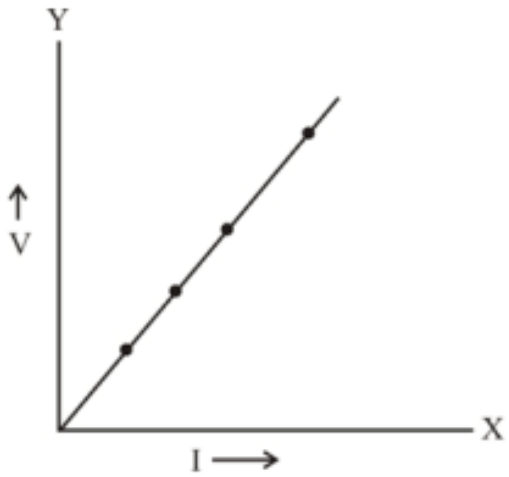

Practice C: To explain a VI graph

Question 1 A student investigates the effect of potential difference (voltage) on the current flow through a light bulb. The data is plotted as shown below. Explain, using this graph, why a light bulb is non ohmic.

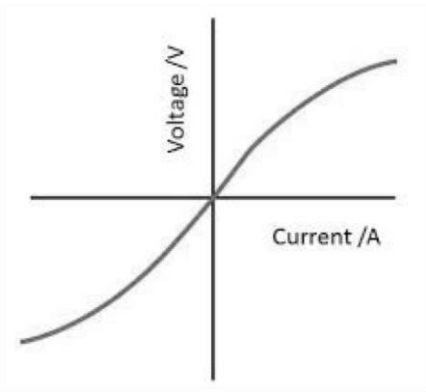

Step 1 Calculate the slope of this graph

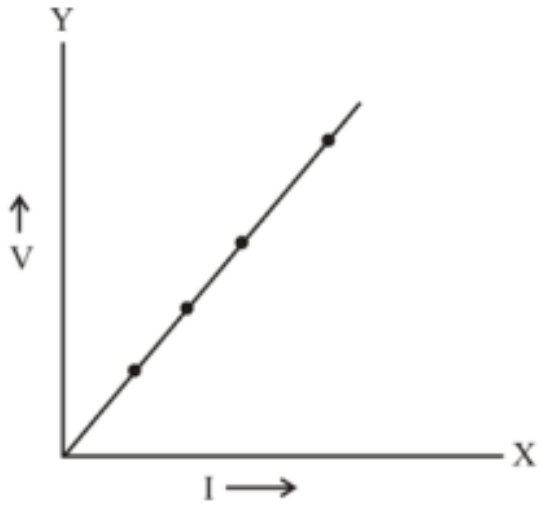

Step 2 Explain why it is ohmic using the data

This graph is a straight line graph, showing the potential difference is directly proportional to the current with a gradient of _____ . Ohm's Law states that if an object is ohmic, the p.d. across two points is directly proportional to the current past through the two points. In other words, the resistance of such an object is a constant. This is what this graph shows. Therefore the resistor in this experiment is ohmic.

Assessment C: To explain a VI graph

A student investigates the effect of potential difference (voltage) on the current flow through a fixed resistor (A) and a light bulb (B) The data is plotted as shown below. Explain why the fixed resistor is ohmic and the light bulb is not.

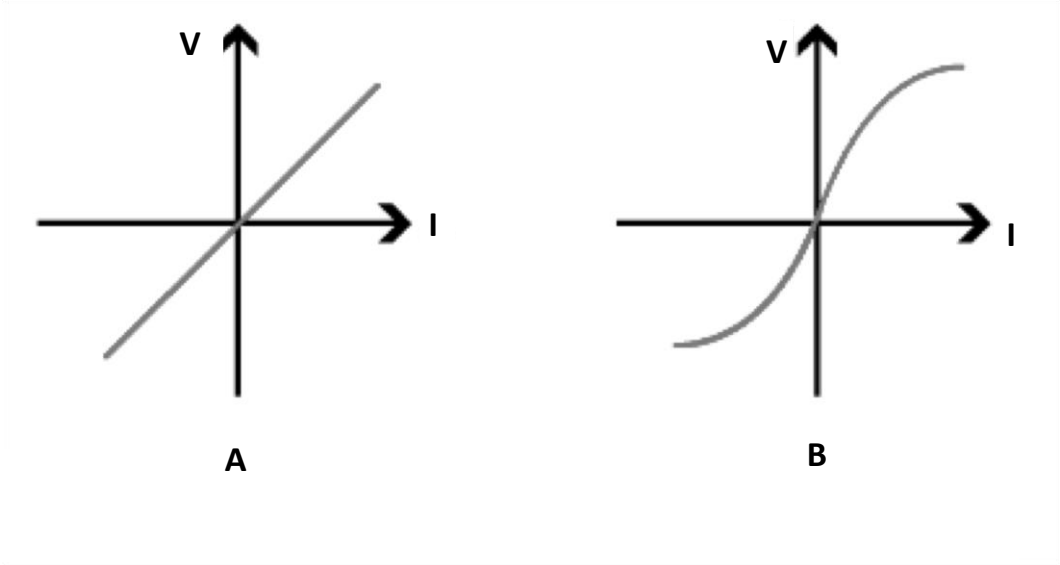

Plenary

Explain why this graph is not a fixed resistor.

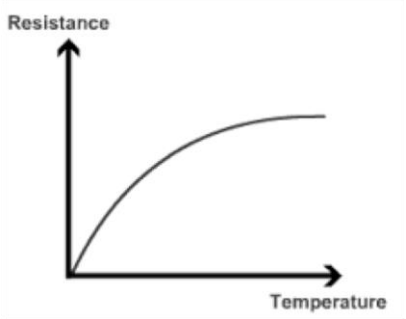

Tutorial 7 - Feedback

What is the Purpose of Tutorial 7?

- To receive feedback on final assessments.
- To share examples of best practice with the other pupils in your group.
- To write targets for improvement in school lessons.
- To reflect on the programme including what was enjoyed and what was challenging.

Final assessment feedback

What I did well…	What I could have improved on…
•	•
•	•
•	•

My target for future work is…

Reflecting on Uni Pathways

What did you most enjoy about Uni Pathways?
• • •

What did you find challenging about the programme?	How did you overcome these challenges?
• • •	• • •

Notes

Notes

Notes

Electrical Circuit

Key Stage 4 Programme

researchersinschools.org