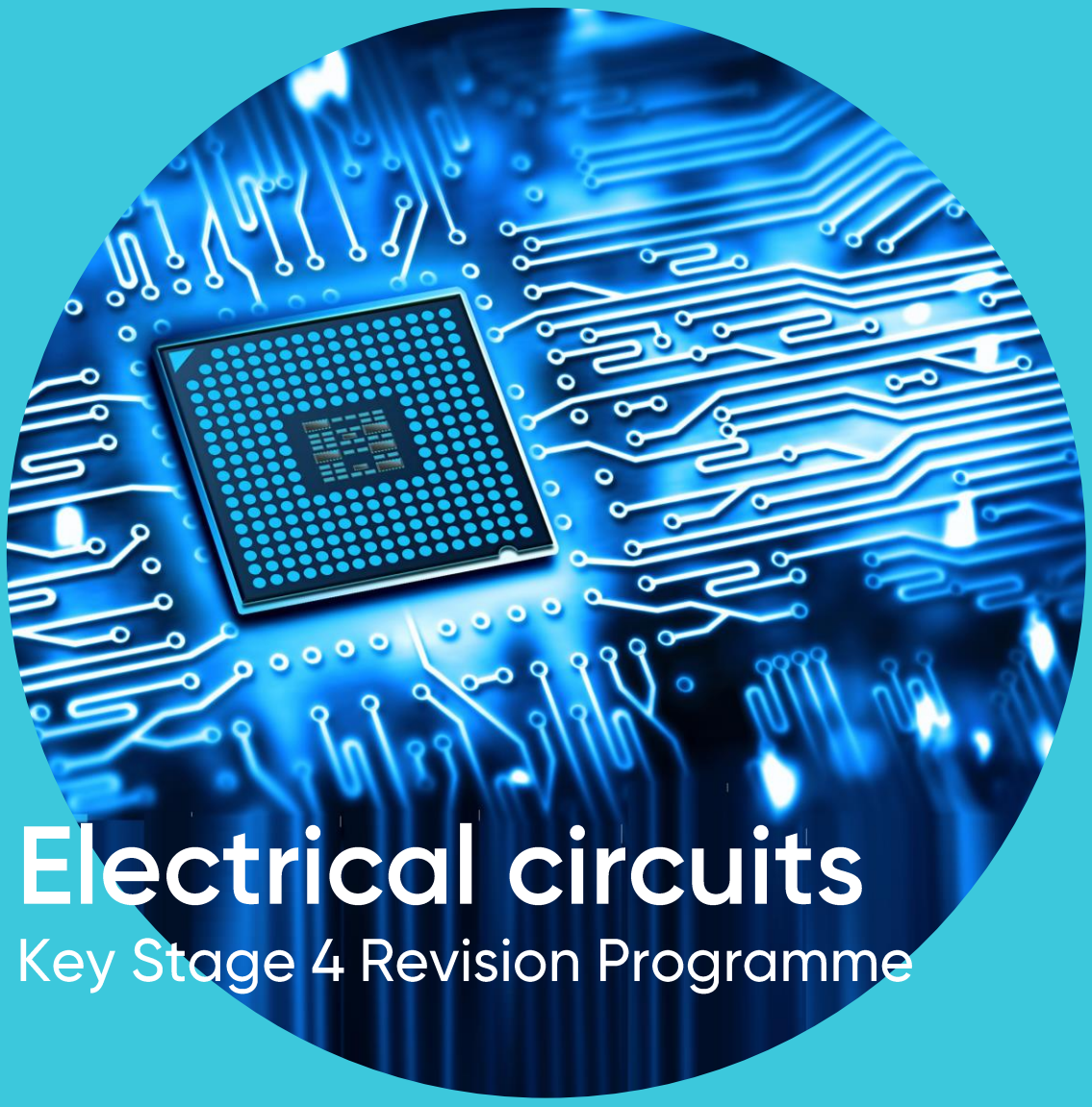

Electrical circuits

Key Stage 4 Revision Programme

Pupil Name	Name
Handbook Designed by	Dr. Thorley

Timetable and Assignment Submission

Timetable – Tutorials

Timetable – Homework Assignments

Tutorial	Date	Time	Location
1 (Baseline)			
2			
3			
4			
5			
6 (Final Assignment)			
7 (Feedback)			

Tutorial 1	Revise what charge is – from Y9	
Tutorial 2	Complete any unfinished practice questions	
Tutorial 3	Complete any unfinished practice questions	
Tutorial 4	Complete any unfinished practice questions	
Tutorial 5	Complete any unfinished practice questions	

Contents

Course Rationale **P4**

Glossary of Keywords **P5**

Tutorial 1: current **P6**

A) Defining current

B) Calculating current

C) Current in series and parallel circuits

Tutorial 2: Potential difference **P10**

A) Defining potential difference

B) Calculating potential difference in series and parallel circuits

C) Calculating energy transferred from charge and potential difference

Tutorial 3: Resistance **P14**

A) Using Ohm's law

B) Changing resistance

C) Resistance of different components

Tutorial 4: Designing circuits **P18**

A) Drawing circuits

B) Thermistors and LDRs

C) Design of circuits for measurement and testing purposes

Tutorial 6: Reflection on feedback **P22**

Reference material **P24**

Course Rationale

This KS4 programme on electrical circuits is designed to give the practice required to master the nuts and bolts of GCSE circuits and help you achieve your best in this topic. This is a topic is highlighted in examiners' reports as one that students find particularly challenging. The design of this course includes a rigorous analysis of past exam questions, to maximise the impact of learning.

This KS4 programme on electrical circuits adopts the philosophy of deliberate practice to gradually master each topic through repeated practice and assessment. Experts in the field of learning theorise that to become an expert, a person must spend 10,000 hours working on a particular skill, for example, mastering a musical instrument or sport. However, these 10,000 hours cannot be spent just playing music or a sport, instead there must be deliberate practice. This means that time is spent on the most effective activities to improve performance.

Deliberate practice activities are highly structured and, unlike sitting down to play a song you like, they are a specific effort to do something you can't do well. Because of the structure and focus, deliberate practice requires resources, effort, and motivation. For these reasons, the university Pathways course this year is very challenging, and you should be incredibly proud of all you achieve during this course.

The philosophy underlying deliberate practice has long been popular in Asia where there is a strong history of high achievement in the more mathematical-based subjects. One of the central criteria for deliberate practice as a study technique is for tutorials to be set up in such a way that you can master skills through repetition and get immediate, personalised feedback. By doing this, you will be able to discover which learning activities are most effective to overcome weaknesses and increase your skill set.

Skills targeted during this course will be transferrable to different topic areas. If you find the revision technique of deliberate practice helps you tackle physics problems, you may wish to consider structuring your revision for other topics in a similar manner.

Learning to use deliberate practice techniques has applications far beyond revision for your GCSEs. It teaches you to think through the problem or task and then make clear decisions for how you can achieve the result you want.

Subject Vocabulary

Word	Definition	In a sentence
Electric charge	A property (like mass) of a particle. It can be positive or negative	An electron has a **charge** of -1, and a proton a **change** of +1
Current	The rate of flow of charged particles, usually electrons. Current = charge / time	In a parallel circuit, **current** is split between branches
Potential difference	A difference in (electrical) potential produced by the separation of charge A potential difference produces an electric field which produces a force on charged particles in it.	The **potential difference** across a circuit component is measured in volts
Resistance	A measure of how easy it is for current to flow in a circuit. Resistance = P.D. / current	The **resistance** of a long wire is greater than that of a short wire
milliamp	1/1000th of an amp	To calculate resistance using current and P.D, you must first convert **milliamps** into amps
Power rating	The rate of transfer of energy by an electrical appliance	The microwave oven that has a **power rating** of 850W will cook food faster the one with a power rating of only 650W

1. Current

Keywords: charge, current, electrons, rate

Objectives this tutorial:

A) Defining current
B) Calculating current
C) Current in series and parallel circuits

Starter: Birds like to sit on power lines. Should they stand on 1 foot or on 2? Explain your answer.

Under what circumstances could they stand on both feet?

Objective A: Defining current

Current is the rate of flow of charge. Current can be caused by the flow of electrons, ions or other charged particles. Conventional current is from positive to negative in circuits.

Current is defined by the equation $I = \frac{Q}{t}$, where:

- *I* is current (in amps, A)
- *Q* is charge (in coulombs, C)
- *t* is time (in seconds, s)

Practice A: Defining current

1) State the equation for current, defining the terms used.

2) Explain why electron flow is in the opposite direction to conventional current in circuits

3) Write a sentence defining current in words

4) Rank the following in order of increasing current: 5 Cs per second; 18 C in 3.6 seconds; 52 C in 10 seconds; 0.2 C in 0.039 seconds; 9.8×10^{-3} C in 2.04×10^{-3} seconds

5) A bolt of lightning hits the top of a tree. Explain whether there a current flowing?

6) A dimmable light in the living room is adjusted from low brightness to high brightness. Explain what happens in terms of electron flow

Assessment A: Defining current

Which statement is incorrect?

A	In a circuit, current can be increased by increasing the number of free-moving electrons
B	In a circuit, current can be increased by decreasing the net speed that electrons are flowing
C	In a chemical electrolysis reaction, current is related to the rate of flow of ions
D	In terms of units, 1 amp = 1 coulomb per second

Objective B: Calculating current

Worked example 1

An appliance draws a current of 9.00A.

A) Calculate how much charge flows in 5 minutes of operation

$t = 5$ minutes $= 5 \times 60 = 300$ seconds ← conversion

$I = 9A$

Study tip
Don't forget to convert non-standard units into standard units!

$I = Q/t$ ← Rearrange the equation

$Q = I \times t$

$Q = 9.00 \times 300$

$Q = 2700$ C ← units

b) How many electrons flow in 5 minutes? (Assume each electron has a charge of -1.60×10^{-19} C)

$Q = 2700$ C in 5 minutes

number of electrons $= 2700 / 1.60 \times 10^{-19}$

number of electrons $= 1.69 \times 10^{22}$

Study tip
Only answer to the same number of decimal places or significant figures that are given to you in the question

Worked example 2

5.80×10^{21} electrons flow through an appliance that is operating at 5.00 mA.

The appliance was supposed to be left running for 2 days. Has it been left running for too long?

$I = 5.00$ mA $= 5.00 \times 10^{-3}$ A ← Convert units

$Q = (5.80 \times 10^{21}) \times (1.60 \times 10^{-19})$ ← Find the total charge that flowed

$Q = 928$ C

Study tip
Each coulomb of charge is made up of many electrons.

$I = Q/t$ ← Rearrange equation

$t = Q/I$

$t = 928 / 5.00 \times 10^{-3}$

$t = 185600$ s

Study tip
To find total charge, multiply the number of electrons, by the charge on a single electron

Convert time into days

2 days $= 2 \times 24 \times 60 \times 60 = 172800$ s ← Compare with your earlier calculations

Yes the appliance has been left on for too long

Practice B: Calculating momentum

1) Ada puts her phone on to charge. 1.2 C of charge are transferred in half an hour. What was the current?

2) How much charge flows through a lamp in 2 minutes if it carries a steady current of 0.30 A?

3) A bolt of lightning transfers a charge of 15 C in 5.0×10^{-4} seconds. Calculate the current. Give your answer in standard form

4) The touch screen of a mobile phone produces a current of 0.15 mA whenever it is being operated. Khadija scrolls through her messages for 3 minutes whist on the bus home.
   a) How much charge flows? Give your answer in coulombs

   b) How many electrons flowed past the screen in this time?
   (Assume for these questions that electrons have a charge of -1.60 x 10^{-19} C)

5) A 3.00 A electric guitar has a 360 C of charge flowing through it.
   a) How long was the electric guitar operating?

   b) How many electrons passed through the guitar in this time?

6) Whilst Sara is playing music on a speaker, 5.40 x 10^{21} electrons flow through the speaker in 6 minutes.
   a) How much charge has flowed?

   b) What is the current drawn by this appliance?

Assessment B: Calculating current

To deter predators, an electric eel produces a current of 0.15mA for 6.0 x 10^{-3} seconds.
Calculate the charge in coulombs transferred in this time.

A	40 C
B	0.025 C
C	9 x 10^{-4} C
D	9 x 10^{-7} C

Objective C: Current in series and parallel circuits

Current is measured using an **ammeter**. This is connected in series with the other components.
In series circuits: current is the same at every point in a series circuit
In parallel circuits: The sum of currents entering a junction is equal to the sum of currents leaving a junction

In series

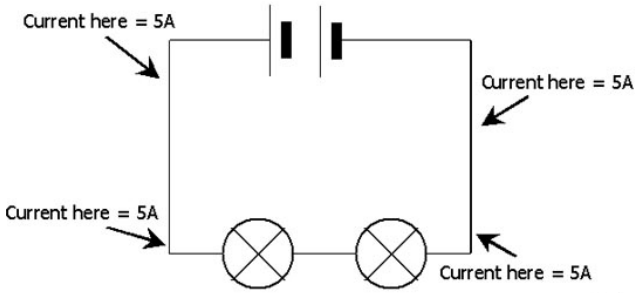

In parallel: The currents flowing into a branch must equal those flowing out of the branch

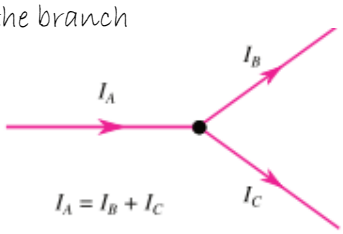

Worked example 1

Calculate the currents through each of the ammeters in this circuit

Current through ammeter A4

This is on the same loop of the circuit as A3

Follow rules for current in series circuits

A3 = A4 = 0.6A

Current through ammeter A2

This is on a different loop of the circuit as A3

Follow rules for current in parallel circuits

Total current = A1 = 1.5A

A1 = A2 + A3

A2 = A1 – A3 = 1.5 – 0.6

A2 = 0.6 A

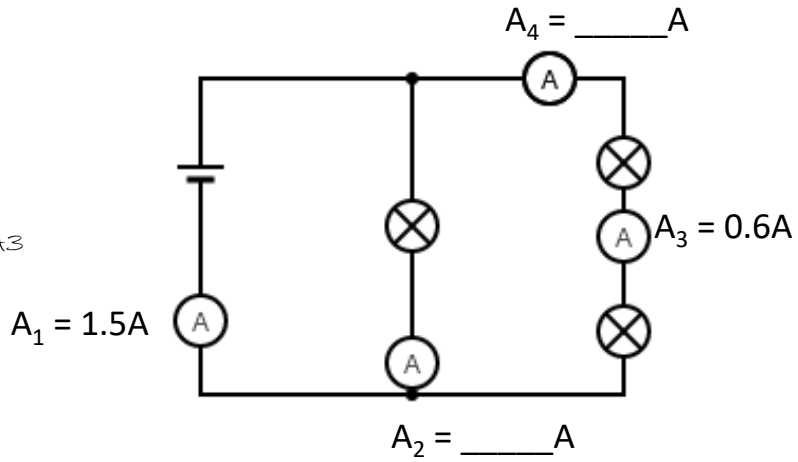

Practice C: Calculating current in series and parallel circuits

1) Calculate the missing values for the ammeters

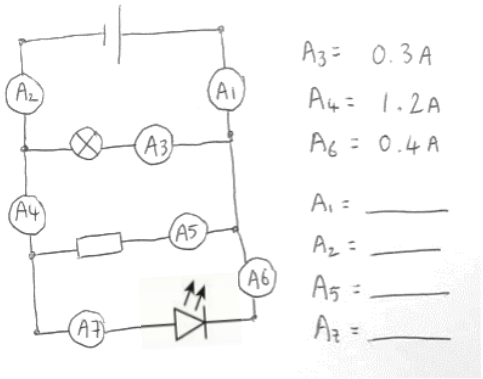

Assessment C: Calculating current in series and parallel circuits

The diagram shows a circuit containing three ammeters P, Q and R.

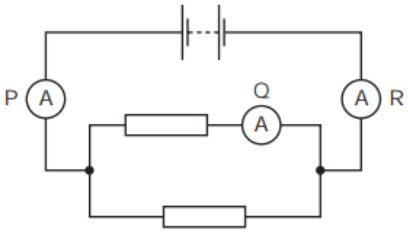

Which statement about the readings on the ammeters is correct?

A The reading on P is equal to the reading on Q.

B The reading on P is equal to the reading on R.

C The reading on Q is greater than the reading on P.

D The reading on Q is greater than the reading on R.

Plenary: Graphene is a material made from a single layer of carbon atoms, it is effectively a single layer of graphite.

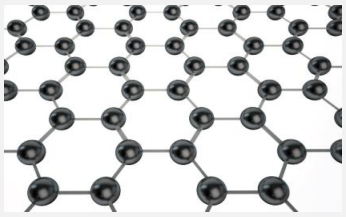

a) Will this material conduct electricity? Explain your answer.

b) Considering the context of this tutorial's objectives, what factors will determine the magnitude of any current produced?

2. Potential difference

Keywords: charge, energy, potential difference

Objectives this tutorial:

A) Defining potential difference
B) Calculating potential difference in series and parallel circuits
C) Calculating energy transferred from charge and potential difference

Starter: An electric fence to stop cows escaping from a field is designed to deliver a shock with a potential difference of 2000V.
Fences for sheep, however, can deliver a shock of up to 5000V.
Suggest why they are different?

Explain in terms of energy transfer what happens as the potential difference of the fence is increased

Objective A: Defining potential difference

Potential Difference (P.D.) is the difference in electrical potential between two points in a circuit.
This can be thought of as the difference in how much energy each coulomb of charge has at two points in the circuit.

Cells and power supplies transfer energy to each coulomb of charge. This energy is dissipated as the charge travels around a circuit.

For example, a 6V battery transfers 6J of energy to every 1C of charge

Other circuit components: As charge travels through each component in a circuit, energy is transferred, for example, to light when charge passes through an LED. The potential difference across a component is the energy transferred in driving the charge through the component.

For example, if the potential difference across an bulb is 1.5V, then the LED is transferring 1.5J of energy from every 1C of charge into light and heat

Practice A: Defining current

1) Describe the relationship between potential difference, energy and charge

2) Explain how increasing the number of cells in a circuit will affect:
   a) potential difference b) energy transfer

3) The unit of potential different is the volt (V). Can you express this in terms of energy, J, and charge, C

4) Write an equation that links potential difference, energy and charge. Use your answer to question 3 to help you.
   Potential difference =

5) There are a selection of phone charging plugs in a box. They are labelled 3V, 4.5V, 6V. Explain how the plugs differ in terms of energy and charge.

6) Put these in order of increasing potential difference:
   0.60 J transferred by 0.20 C; 31.0 J transferred by 10.1C; 4.60×10^{-17} J transferred by 1.50×10^{-17} C; 4.85×10^{-19} J transferred by one electron

Assessment A: Defining potential difference

Which statement is incorrect?

A	In a circuit, the potential difference is the work done per unit charge
B	In a circuit, potential difference is related to the energy dissipated across each component
C	1 V = 1 C / 1 J
D	The greater the potential difference, the more energy is transferred by every coulomb of charge

Objective B: Calculating potential difference in series and parallel circuits

Potential difference is measured using a **voltmeter**. When a voltmeter is being used to measure the P.D. across a component, it is connected in parallel with that component.

In series circuits: P.D. is shared between components. This means that the potential difference across the power supply is always equal to the sum of the P.D.s across the rest of the components.

In parallel circuits: P.D. is the same across every branch of a parallel circuit.

Series circuit

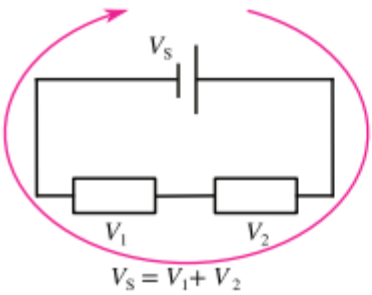

Parallel circuit

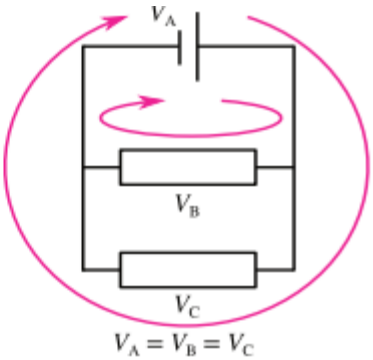

Worked example 1

Calculate the P.D. across resistor, R

This is a series circuit, so the sum of P.D. across the components must equal the P.D. across the power supply

750mV = 0.75 V ← Convert units

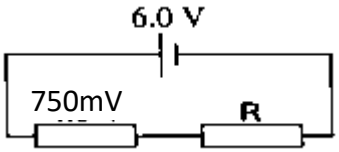

P.D across R = 6.0 – 0.75

P.D across R = 5.25 V

Worked example 2

Calculate the P.D. across resistors, R1 and R2

This circuit has both series and parallel components

R2 is in parallel with the 4.0V resistor

When in parallel, the P.D. across each branch is equal

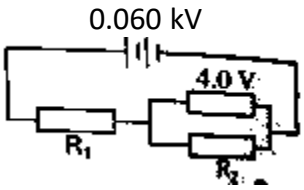

R2 = 4.0 V

R1 is in series, so the sum of P.D. across the components must equal the P.D. across the power supply

← Convert units

0.060 kV = 6.0 V

R1 = 6.0 – 4.0

R1 = 2.0 V

Practice B: Calculating potential difference in series and parallel circuits

2) In the circuit below, what are the potential differences A and B?

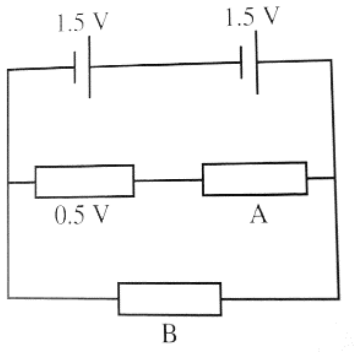

2) In the circuit below, what are the readings on the voltmeters V1, V2 and V3?

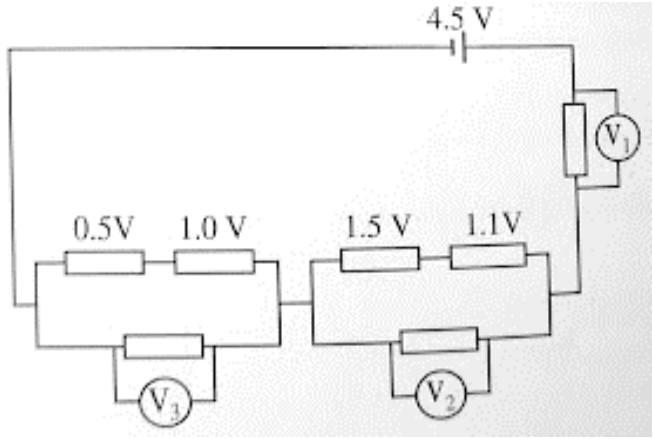

3) In the circuit below, what are the readings on the voltmeters V1, V2 and on the ammeters A1 and A2

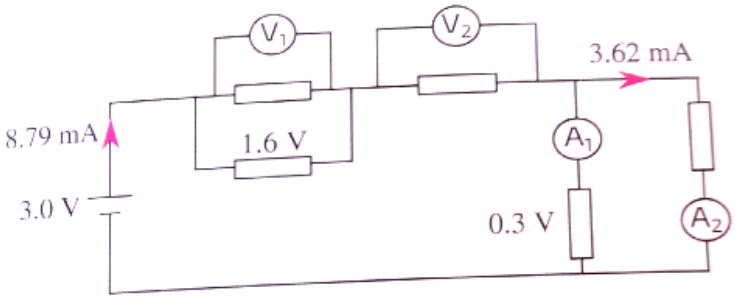

Assessment B: Calculating potential difference in series and parallel circuits

The diagram shows an electrical circuit. Between which two points must a voltmeter be connected to measure the P.D. across the light emitting diode (LED)?

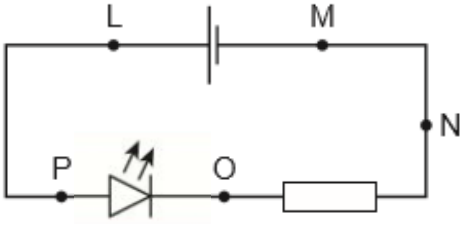

A L and M **B** M and N **C** N and O **D** O and P

Objective C: Calculating energy and power from charge and potential difference

Looking back at objective 1, defining potential difference, potential difference is equal to the energy transferred per unit charge. If we were express this as an equation, it would look like:

Potential difference = energy / charge

This rearranges to give the equation:

energy transferred (J) = charge (C) x potential difference (V)

E = QV

Power describes how much energy tis transferred every second, its units are Watts. To calculate power:

Power (W) $= \frac{Energy\ transferred\ (J)}{Time\ (s)} = \frac{Q\,V}{t} = V \times I$

Study tip
P = VI is derived using the definition of current, from tutorial 1, objective 1

Power (W) = current (A) x potential difference (V)

P = V I

Study tip: There are lots of different ways to calculate power, both for electricity and forces.

Power is always equal to:
Energy transferred (or work done) ÷ $time$

For GCSE, you must be able to recall and apply both the equations highlighted in bold above.

Practice C: Calculating energy from charge and potential difference

1) An appliance transfers 3.5 C of charge across a P.D of 6V in 70 seconds. Calculate the:
   a) energy transferred b) power

2) Calculate the energy transferred by a microwave oven that is operated at 850W for 1 minute

3) A heater is designed to work from a 3.6V supply. It has a power rating of 4.5W at this potential difference. Calculate the current in the heater.

Assessment C: Calculating energy from charge and potential difference

An 8.0 kW power shower is run using mains P.D, 240V. Which fuse is most appropriate to protect the system if there is a fault?

A	10A
B	32A
C	40A
D	50A

Plenary: Solar panels generate electricity as energy from sunlight is transferred to electrons in the special materials that solar panels are made from. The flow of electrons when sunlight hits the panel is an electric current

Write a short paragraph to explain why the power output from a solar panel is greater on a sunny day in Turkey than on an equally sunny day in England.

3. Resistance

Keywords: resistance, electrons, Ohm's law, characteristic graph

Objectives this tutorial:

A) Using Ohm's law
B) Changing resistance
c) Resistance of different components

Starter: In a lightning storm, a person is standing near to a metal fence post of exactly the same height. Which will the lightning be more likely to hit. Explain your answer in terms of electron movements

Can you relate this to resistance in an electrical circuit?

Objective A: Using Ohm's law

The current that flows in a circuit depends on both Resistance and Potential Difference (P.D.). You can not directly change the current in a circuit, you can only change the P.D. (e.g. by increasing the number of cells), or the resistance. The relationship between current, P.D. and resistance is known as **Ohm's law**

For a constant P.D, the greater the resistance, the lower the current.

potential difference (V) = Current (A) x Resistance (Ω)

$$V = I R$$

Study tip: You need to be able to recall and apply Ohm's law (this equation)

Worked example 1:

If you hold the ends of a 9V battery, a current of 60 µA flows though you. Calculate your resistance.

$60\ \mu A = 6.0 \times 10^{-5}\ A$ ← Convert units

$R = \frac{V}{I}$ ← Rearrange equation

$R = \frac{9}{6.0 \times 10^{-5}} = 1.5 \times 10^{5}\ \Omega = 150{,}000\ \Omega$

Study tip
The prefix micro- (µ) represents 1×10^{-6}
e.g. 15um = 15×10^{-6} A = 1.5×10^{-5}A

Practice A: Using Ohm's law

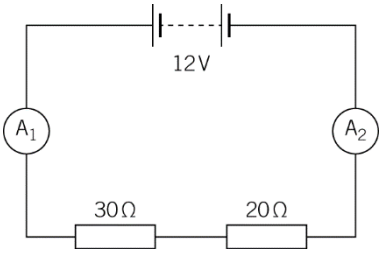

1) The potential difference across the 30 Ω resistor is 7.2 V.
   a) What is the potential difference across the 20 Ω resistor?

The 20 Ω resistor is replaced with a LDR. In the dark, its resistance is 50 Ω.
   b)Calculate the current flowing through the LDR in the dark
   c)Suggest a possible value for the resistance of the LDR when the light is switched on

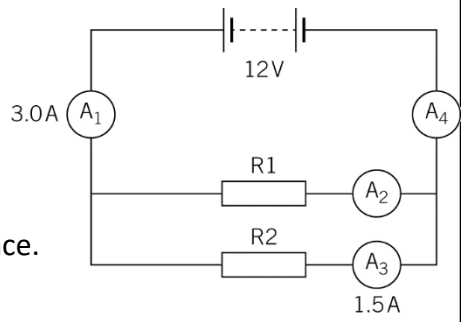

2) In this circuit, both the resistors are the same value.
   a)What is the potential difference across R1?

The supplied p.d. is doubled but the overall resistance stays the same.
   b)Work out the reading on ammeter A4. Show your reasoning.

Resistor R2 is replaced for one with one with only one third of the resistance.
   c) How will this affect the reading on ammeter A3?
   d) Will any other ammeter readings be affected? If so, which ones.

Assessment A: Using Ohm's Law

A 30 Ω resistor is connected in series with another resistor and a 6.0 V battery. The current in the circuit is 0.12 A. A voltmeter is connected across the other resistor.

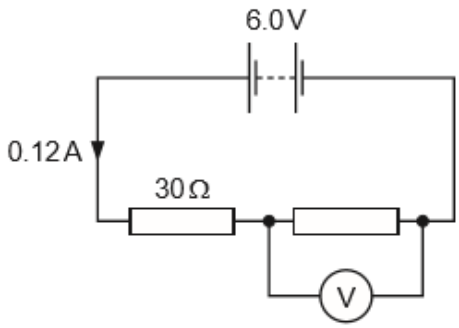

What is the reading on the voltmeter?

A 2.4 V **B** 3.6 V **C** 6.0 V **D** 9.6 V

Objective B: Changing resistance

In a circuit, with a constant P.D., the resistance can be changed. Changing the resistance will affect the current. The greater the resistance, the harder it is for electrons to flow so this reduces the current.

In series circuits: Connecting resistors in series increases resistance and decreases current. This is because every electron now has to flow through more resisters, so the rate of flow of charge around the circuit will be reduced

Study tip
Remember that current is rate of flow of charge.

In parallel circuits: Connecting resistors in parallel decreases resistance and increases current. This is because there are alternative routes that electrons can flow around the circuit.

Worked example 1
The current is 40mA, calculate the resistance across resistor, R

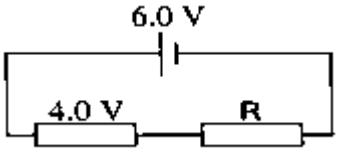

This is a series circuit, so the sum of P.D. across the components must equal the P.D. across the power supply
P.D across R = 2.0 V

I = 40mA = 0.04 A ← Convert units

$R = \frac{V}{I} = \frac{2.0}{0.04} = 50\ \Omega$

Worked example 2
This is a circuit diagram for an electric heater. If the resistance of the heater is 5.5 kΩ, calculate the resistance across the variable resistor when the ammeter reading is 40 mA

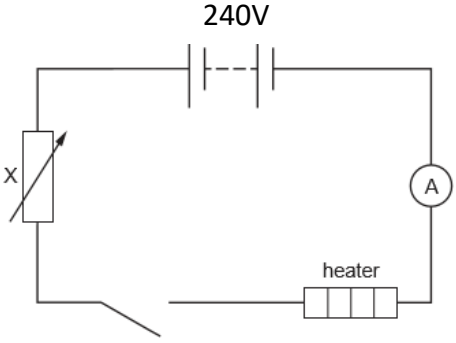

I = 40mA = 0.04 A
R = 5.5 kΩ = 5500 Ω ← Convert units

Step 1: Calculate P.D across the heater
V = IR = 0.04 x 5500 = 220 V

Step 2: In a series circuit P.D. across both components must add to equal the P.D. across the power supply
P.D. across the variable resistor = 240 – 220 = 20 V

$R = \frac{V}{I} = \frac{20}{0.04} = 500\ \Omega$

Practice B: Changing Resistance

1) The current through both the variable resistor, B, and the fixed resistor, A, is 1.5 A.
   a) Calcualte the resistance of variable resistor B
   b) The resistance of B is doubled. How will this affect the current flowing through B
   c) How will this change affect the current flowing through A? Explain your answer

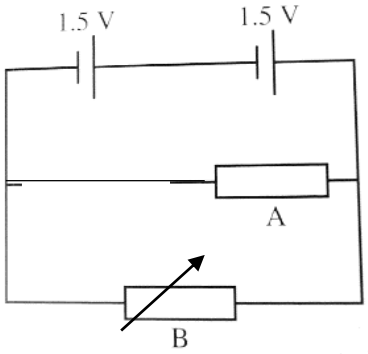

2) In Fig. 9.1, a 12V battery supplies a current I to a circuit. The circuit contains a thermistor and a 1000 Ω resistor in parallel, with a 500 Ω resistor in series.

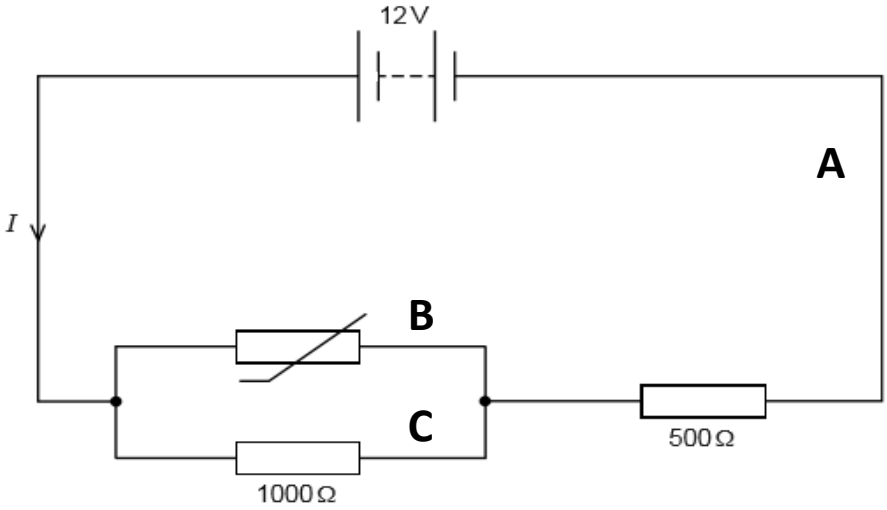

Fig. 9.1

At a certain temperature, the thermistor has a resistance of 1000 Ω.At this temperature, the ammeter reading at A is 0.012A

a) Deduce the current at B when the resistance of the thermistor is 1000 Ω
b)The temperature increases, this makes the resistance of the thermistor decrease to 200 Ω How will this affect the Ammeter readings at B and C? Explain your answer
d) will the ammeter reading A be affected? If so, how?

Assessment B: Changing Resistance

In this circuit, the lamp is not glowing brightly. Component B is a light dependent resistor (LDR). Which of these approaches will make the lamp glow more brightly?

A	Increase the temperature
B	Decrease the temperature
C	Increase the light intensity
D	Decrease the light intensity

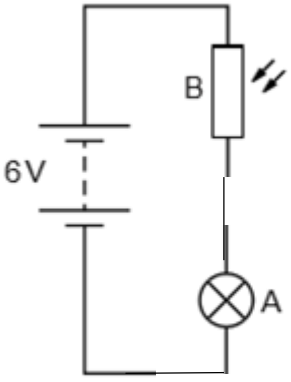

Objective C: Resistance of different components

A graph of current plotted against resistance is called a characteristic graph. These are produced by measuring the current through a component at many different P.D.s
Different components have different characteristic graphs. You need to be able to recognise and explain the shape of these graphs for different components.

The steeper the gradient, the lower the resistance

Worked example 1:
Which two graphs show the characteristics of an ohmic resistor and a filament lamp? Explain your answers.

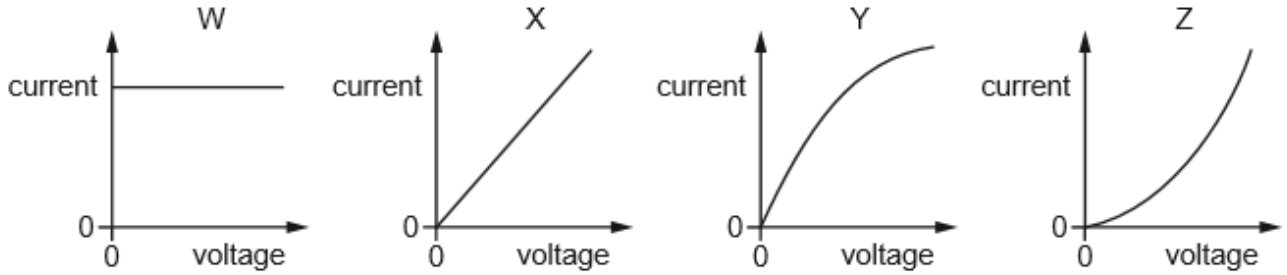

Study tip Current is plotted on the Y axis of a characteristic graph because it is always the dependant variable (objective 1)

The ohmic resistor is represented by graph X. This is because resistors obey Ohm's law, V = IR. As the P.D. is increased, the current increases proportionally because the resistance remains constant. Resistance is calculated by 1÷gradient.

The filament lamp is represented by graph Y. As the P.D. is increased, initially current increases rapidly. However, as the current increases, the filament heats up and glows. The metal ions in the filament gain energy and vibrate more, impeding the flow of electrons, so resistance increases. This is shown by a decreased gradient of the graph Y.

Practice C: Resistance of different components

1) Sketch the characteristic graph for:
   a) A diode b) The wire inside a heater that gets hot as current increases

2) A student uses a length of wite as a resistor. She makes a second resistor from the same material. To be certain of making a second resistor of a higher resistance, she should use a piece of wire that is:
   a) longer and thicker b) longer and thinner c) shorter and thinner d) shorter and thicker

3) In a filament lamp, a thin wire glows when a current flows through it. A student states that filament lamps obey Ohm's law. Use scientific ideas to explain why the student is incorrect.

Assessment C: Resistance of different components

A small P.D. is applied across a filament lamp. The current in the lamp is measures. P.D. is increased in stages and the current is measured at each stage. Which graph shows the results obtained?

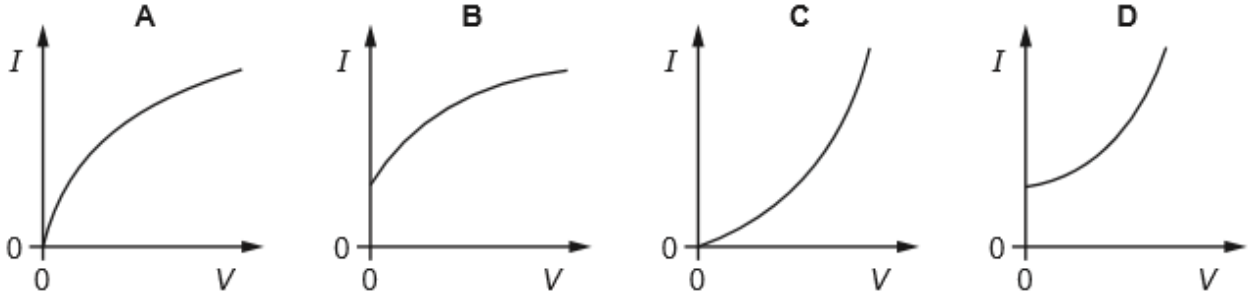

4. Designing circuits

Keywords: component, junction, application

Objectives this tutorial:

A) Drawing circuits
B) Thermistors and LDRs
C) Design of circuits for measurement and testing purposes

Starter:
An otoscope is commonly used by ear, nose and throat doctors to observe inside the ears using a bright light and magnifying lens.
What components and circuit might be inside this device?
Draw a diagram to show your ideas

Objective A: Drawing circuits

You will be required to draw or complete circuit diagrams, identify components, and understand their function in different circuits. A list of circuit components and functions is provided in the reference material.

Practice A: Drawing circuits

1) Fill in the gaps in the table with the missing names and symbols of circuit components.

Switch	
Filament lamp	

Study tip: Always draw circuits and components neatly using a ruler and pencil. Make sure that all the junctions are joined as shown below

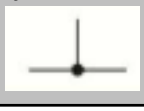

1) A student determines the resistance of a length of Aluminium wire. She connects the wire in series with a battery and another component, A. This is shown in the circuit diagram below.
   a) Name component A
   b) She knows that an ammeter is needed, on the figure, draw the symbol for an ammeter in an appropriate position

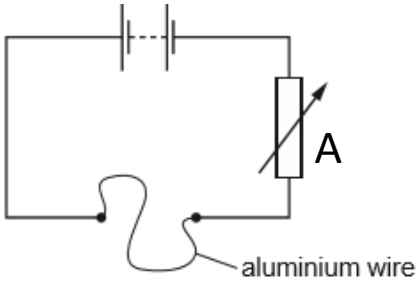

3) Pacemakers are used to maintain a regular heartbeat in patients with arrhythmias or irregular heartbeats. The timing components are delicate and could be damaged if current flows the wrong way through them. Name and draw the symbol for a circuit component that could protect against this.

Assessment A: Drawing circuits

What circuit components are represented by symbols P and Q?

	P	Q
A	Thermistor	Variable resistor
B	Thermistor	Light dependent resistor
C	Variable resistor	Fixed resistor
D	Variable resistor	Light dependent resistor

P

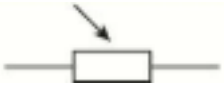

Q

Objective B: Thermistors and LDRs

Thermistors: Resistance is decreased as temperature is increased.
Light dependent resistors (LDRs): Resistance is decreased as light intensity is increased

Worked example
This diagram shows a circuit from inside an appliance

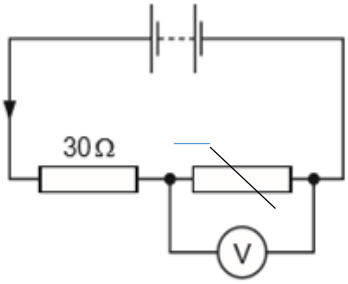

a) Name component A
Component A is a thermistor

a) Sketch a graph to show how resistance of component A changes as temperature is increased.

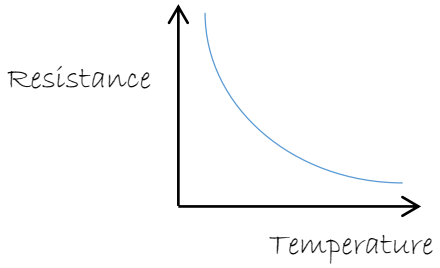

Study tip: Always put the independent variable on the X-axis

b) Suggest a practical application for this circuit
This circuit could be used in any device which needs to monitor temperature. For example, the thermostat for an electric central heating system

Practice A: Thermistors and LDRs

1) Suggest 2 other applications that may require a thermistor

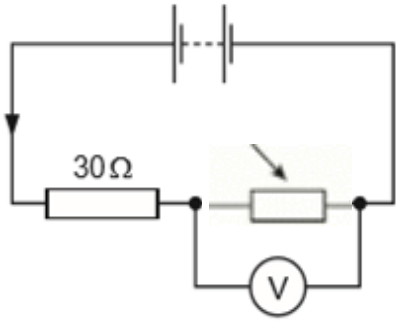

2) This diagram shows a circuit that measures P.D. across a component, A.
   a) Name component A
   b) Sketch a graph to show how resistance of component A changes as light intensity is increased.
   C) Suggest a practical application for this circuit

Assessment A: Thermistors and LDRs

The diagram shows part of a circuit used to switch street lamps on and off automatically.
In the evening it gets dark.
Which row shows the effect on the resistance of the Light-Dependent resistor (LDR), and on the P.D. across it?

v	Resistance of LDR	P.D. across LDR
A	Decreases	Decreases
B	Decreases	increases
C	Increases	Decreases
D	increases	increases

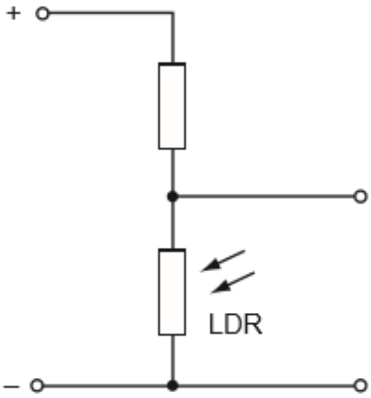

Objective B: Design of circuits for measurement and testing purposes

You may be required to draw or design circuits using any of the components pictured in the starter.
These are common questions that aim to test your understanding of the practical aspect of the GCSE course

Worked example 1
Amanda wants to make a circuit containing 1 cell, an 8Ω and a 22Ω resistor connected in parallel. She plans to measure the current and P.D. across the 22 Ω resistor.

Draw a circuit diagram for the circuit she should make. In your circuit, show the position of components to measure the current and P.D. across the 22 Ω resistor.

Components I will need to put in the circuit: Ammeter, voltmeter, 2 resistors connected in parallel, cell

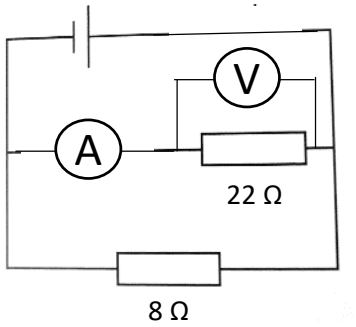

Study tip: Remember that ammeters are connected in series and voltmeters in parallel

Worked example 2
This is a characteristic graph obtained for a diode.
Draw a circuit that could have been used to obtain these results.

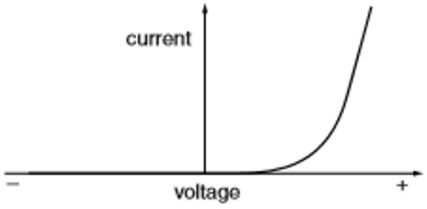

Characteristic graphs show the current plotted against P.D. To obtain this data I need to measure the current using an ammeter and the P.D. using a voltmeter.
Components I will need to put in the circuit: Ammeter, voltmeter, diode, cell or power supply

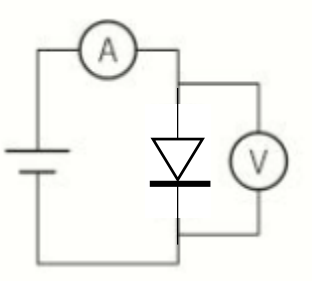

Study tip: All types of diodes will only let a current pass through them in one direction. The circuit symbol looks like an arrow, this shows he direction current can flow.

Study tip: All circuits used to gather data for characteristic graphs are based on this design. Just modify it to change the component you want to measure

Practice B: Designing circuits for measurement and testing purposes

1) This is a characteristic graph obtained for a filament lamp.
   a) State how the graph can be used to calculate the resistance of the lamp
   b) What components are required to build a circuit to obtain these results
   c) Draw a circuit that could have been used to obtain these results.

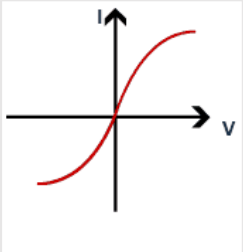

A filament lamp (non-ohmic).

2) A digital thermometers used by paramedics works by measuring changing P.D.
   a) What components are required to build a circuit for this thermometer
   b) Draw a circuit that could be used for this application

3) An LED backlit phone screen is designed to grow brighter gradually as the external light intensity decreases.
   a) What components are required to build this circuit
   b) Draw a circuit that could be used for this application

4) Anita is an electrical engineer. Her job is to design a circuit to control the temperature in an incubator. The circuit needs to switch a heater on if the temperature in the incubator falls too low.
   The symbol to use for a heater is:

   Draw a circuit that could be used for this application

5) a) Draw a circuit diagram that could be used to find out how the current through a fixed resistor varies with applied potential difference (between 0 and 12 V).
   b)Describe the readings you need to take.

Assessment B: Designing circuits for measurement and testing purposes

What is the function of this circuit?

A	To allow a lamp to be made dimmer or brighter as required
B	To light a lamp in the dark
C	To switch a light on when the temperature rises
D	To switch off a lamp if it gets too hot

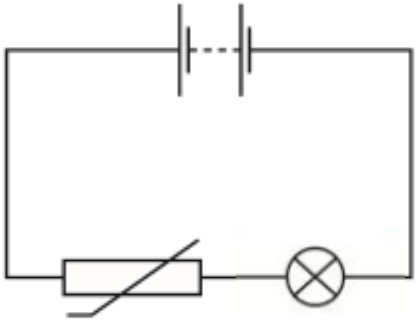

Plenary:
An important job of a pathologist is to observe samples under a microscope. Microscopes contain a simple circuit containing a power supply, or cell, switch and lamp. Draw a circuit diagram for this.

Suggest how you could modify this circuit to allow the user to adjust the brightness

Tutorial 7 - Feedback

What is the Purpose of Tutorial 6?

•To receive feedback on final assignments.
•To share examples of best practice with the other pupils in your group.
•To write targets for improvement in school lessons.
•To reflect on the programme including what was enjoyed and what was challenging.

Final assignment feedback

What I did well...	What I could have improved on...
•	•
•	•
•	•

My target for future work is...

Reflecting on Uni Pathways

What did you most enjoy about Uni Pathways?
• • •

What did you find challenging about the programme?	How did you overcome these challenges?
• • •	• • •

Reference material – circuit components

Electrical component	Symbol	Function in a circuit
junction of conductors		Current split to flow through different branches of parallel circuit
switch		Used to stop and start the flow of current in a circuit
electric cell	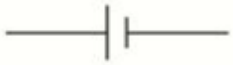	Source of potential difference
battery of cells	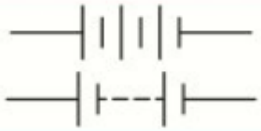	Multiple cells arranged in series as a source of potential difference
power supply		Source of potential difference. Can be varied change the P.D.
diode	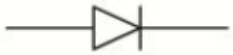	A component with very low resistance in one direction, but a very large resistance in the other. Effectively only allows unidirectional current flow
light-emitting diode (LED)		Diode that emits light, it only allows current to flow one way through a circuit
ammeter		Measures current
voltmeter	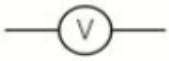	Measures P.D
fixed resistor		Impedes the flow of current in a circuit
variable resistor	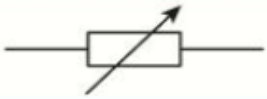	A circuit component which has a resistance that can be varied by changing the amount of wire or other resisting material
light-dependent resistor (LDR)	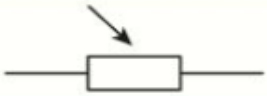	A circuit component which has a resistance that depends on light levels. A semiconductor
thermistor	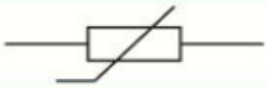	A circuit component which has a resistance that depends on temperature. A semiconductor
lamp		Emits light as current flow through a thin filament of wire, causing it to heat and glow white hot

Reference material – Equations in Physics

You need to **remember** these equations and the units they are measured in. You need to be able to re-arrange them too.

density (kg/m^3) = mass (kg)/volume (m^3)	$\rho = \frac{m}{V}$
distance travelled (m) = speed (m/s) x time (s)	$s = vt$
acceleration (m/s^2) = change in velocity (m/s)/time (s)	$a = \frac{\Delta v}{t}$
kinetic energy (J) = 0.5 x mass (kg) x (speed (m/s))^2	$E_k = \frac{1}{2}mv^2$
force (N) = mass (kg) x acceleration (m/s^2)	$F = ma$
momentum (kgm/s) = mass (kg) x velocity (m/s)	$p = mv$
work done (J) = force (N) x distance (m) (along the line of action of the force)	$W = F\Delta s$
power (W) = work done (J)/time(s)	$P = \frac{W}{t}$
force exerted by a spring (N) = extension (m) x spring constant (N/m)	$F = k\Delta x$
gravity force (N) = mass (kg) x gravitational field strength, g (N/kg)	$W = mg$
(in a gravity field) potential energy (J) = mass (kg) x height (m) x gravitational field strength, g (N/kg)	$E_p = mgh$
pressure (Pa) = force normal to a surface (N)/area of that surface (m^2)	$P = \frac{F}{A}$
moment of a force (Nm) = force (N) x distance (m) (normal to direction of the force)	$M = Fd$
charge flow (C) = current (A) x time (s)	$Q = It$
potential difference (V) = current (A) x resistance (Ω)	$V = IR$
energy transferred (J) = charge (C) x potential difference (V)	$E = QV$
power (W) = potential difference (V) x current (A) = (current (A))^2 x resistance (Ω)	$P = IV = I^2R$
energy transferred (J, kWh) = power (W, kW) x time (s, h)	$\Delta E = Pt$
wave speed (m/s) = frequency (Hz) x wavelength (m)	$v = f\lambda$
efficiency = useful output energy transfer (J)/input energy transfer (J)	$E_f = \frac{\Delta E_u}{\Delta E_T}$

You'll need to be familiar with these and able to **select** the right equation. You'll need to remember the units and be able to rearrange them.

change in thermal energy (J) = mass (kg) x specific heat capacity (J/kg°C) x change in temperature (°C)	$\Delta E = mc\Delta T$
thermal energy for a change in state (J) = mass (kg) x specific latent heat (J/kg)	$E = mL$
pressure (Pa) x volume (m^3) = constant (for a given mass of gas and at a constant temperature)	$PV = k$
pressure due to a column of liquid (Pa) = height of column (m) x density of liquid (kg/m^3) x g (N/kg)	$P = h\rho g$
(final velocity (m/s))^2 - (initial velocity (m/s))^2 = 2 x acceleration (m/s^2) x distance (m)	$v^2 = u^2 + 2as$
energy transferred in stretching (J) = 0.5 x spring constant (N/m) x (extension (m))^2	$E_{el} = \frac{1}{2}k\Delta x$
force on a conductor (at right angles to a magnetic field) carrying a current (N) = magnetic field strength (T) x current (A) x length (m)	$F = BIl$
potential difference across primary coil (V)/potential difference across secondary coil (V) = number of turns in primary coil/number of turns in secondary coil	$\frac{V_p}{V_s} = \frac{N_p}{N_s}$
potential difference across primary coil (V) x current in primary coil (A) = potential difference across secondary coil (V) x current in secondary coil (A)	$V_pI_p = V_sI_s$

***Bold** type is only applicable to the higher tier.

Notes

Notes

Notes

Electric circuits

Key Stage 4 Programme

researchersinschools.org