Electricity

Key Stage 4 Revision Programme

Pupil Name

Handbook Designed by J. L. Rigueur, PhD

Timetable and Assignment Submission

Timetable – Tutorials

Tutorial	Date	Time	Location
1 (Baseline)			
2			
3			
4			
5			
6 (Final Assignment)			
7 (Feedback)			

Timetable – Homework Assignments

Tutorial 1		
Tutorial 2		
Tutorial 3		
Tutorial 4		
Tutorial 5		

Uni Pathways – Pupil Feedback Report

Name of PhD Tutor			
Title of Assignment			
Name of Pupil			
Name of School	HARRIS ACADEMY PURLEY		
ORIGINAL MARK / 100		FINAL MARK / 100	
DEDUCTED MARKS		FINAL GRADE	

If marks have been deducted (e.g. late submission, plagiarism) the PhD tutor should give an explanation in this section:

Learning Feedback Comment 1 - *Numeracy*	
What you did in relation to this Key Learning Priority	How you could improve in the future
Learning Feedback Comment 2 – *Literacy*	
What you did in relation to this Key Learning Priority	How you could improve in the future
Learning Feedback Comment 3 – *Practical Activities*	
What you did in relation to this Key Learning Priority	How you could improve in the future
Resilience Comment	
How you showed learning resilience during the course	How you could build learning resilience in the future

Contents

Course Rationale	**P5**
Glossary of Keywords	**P6**
Baseline Assessment	**P8**
Tutorial 1	**P15**
Assessment A	**P16**
Assessment B	**P17**
Assessment C	**P18**
Tutorial 2	**P25**
Assessment A	**P26**
Assessment B	**P28**
Assessment C	**P30**
Tutorial 3	**P31**
Assessment A	**P32**
Assessment B	**P35**
Tutorial 4	**P36**
Assessment A	**P37**
Assessment B	**P39**
Tutorial 5	**P42**
Final Assessment	**P44**
Tutorial 7	**P55**
Reflection on feedback	**P56**
Appendices	**P56**

Course Rationale

Electricity is a broad topic in physics. In this course we approach the learning of materials via dedicated practice. For you to accomplish mastery of the topics of the course, which include Ohm's Law, Series and Parallel Circuits, you will focus on three aspects of learning building and improving your current toolbox. The three aspects are:

Numeracy – Focus on numeracy deals with the declarative, procedural and conditional knowledge you must have when problem solving. What does this mean? Simply you will improve your working memory of equations (declarative), be confident in rearranging equations (procedural) and have a firm grasp on when to rearrange the equation to solve the problem.

Literacy – Focus on literacy deals with the ability to extract mathematical concepts from word problems and additionally be able to utilise scientific vocabulary to describe/explain concepts verbally and pictorially.

Practical – Focus on combining numeracy and literacy for use in interpreting data on a graph and being able to plot data correctly on a graph and extract that information to solve problems.

This course commences with a baseline assessment of a student's ability. From there we embark on four Tutorials with a particular structure. We begin by identifying the objective, then move to dedicated practice and finally assessing what was learnt.

To conclude the course students will take a final assessment that will be 30 minutes in length. This will build confidence in being able to alleviate exam stress and show how students improved. Finally students must be able to adequately discuss how the National Grid functions utilizing the knowledge learnt during this course.

Subject Vocabulary

Word	Definition	In a sentence

Baseline Assessment

What is the Purpose of Baseline Assessment?

- To introduce the topic of the course and the teacher
- To assess pupil level of knowledge and compare performance

Assessment – You have 30 minutes to complete this assessment.

Question 1

The diagram shows the circuit used to obtain the data needed to plot the current-potential difference graph for a filament lamp.

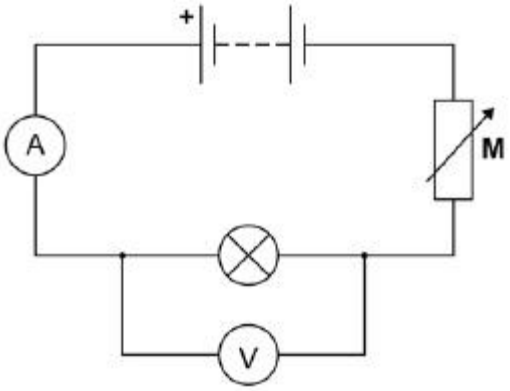

(a) Why is component **M** included in the circuit?

Tick **one** box.

To keep the current constant. ☐

To keep the potential difference constant. ☐

To vary the current. ☐

(1)

(b) Why does the resistance of the lamp increase as the potential difference across the lamp increases?

_____

_____

_____

(1)

(c) The potential difference across the lamp is 12.0 V

Calculate the energy transferred by the lamp when 8.5 C of charge flows through

the lamp.

Use the equation:

Energy transferred = charge flow × potential difference

_____

_____

_____

Energy transferred = _____ J

(2)

(d) The table gives data about two types of lamp that householders may use in their homes.

Type of lamp	Energy efficiency	Mean lifetime in hours
Halogen	10%	2000
LED	90%	36000

Both types of lamp produce the same amount of light.

Describe the environmental advantages of using the LED lamp compared with the halogen lamp.

_____

_____

_____

_____

_____

(2)

(Total 6 marks)

Question 2

A student set up the electrical circuit shown in the figure below.

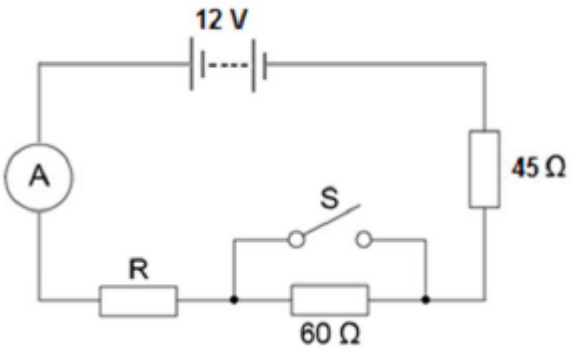

(a) The ammeter displays a reading of 0.10 A.

Calculate the potential difference across the 45 Ω resistor.

_____

_____

Potential difference = _____ V

(2)

(b) Calculate the resistance of the resistor labelled R.

_____

_____

_____

Resistance = _____ Ω

(3)

(c) State what happens to the total resistance of the circuit and the current through the circuit when switch S is closed.

_____

_____

_____

_____

(2)

(Total 7 marks)

Question 3

A small community of people lives in an area in the mountains.
The houses are not connected to the National Grid.

The people plan to buy an electricity generating system that uses either the wind or the flowing water in a nearby river.

Figure 1 shows where these people live.

Figure 1

© Brian Lawrence/Getty Images

(a) It would not be economical to connect the houses to the National Grid.
Give **one** reason why.

_____

_____

_____

_____

(1)

(b) In **this question you will be assessed on using good English, organising information clearly and using specialist terms where appropriate.**

Information about the two electricity generation systems is given in **Figure 2**.

Figure 2

The wind turbine costs £50 000 to buy and install.
The hydroelectric generator costs £20 000 to buy and install.
The average power output from the wind turbine is 10 kW.
The hydroelectric generator will produce a constant power output of 8 kW.

Compare the advantages and disadvantages of the two methods of generating electricity.

Use your knowledge of energy sources as well as information from **Figure 2**.

(6)

(Total 7 marks)

Question 4

The diagram shows a temperature sensing circuit used to control a heating system in a house.

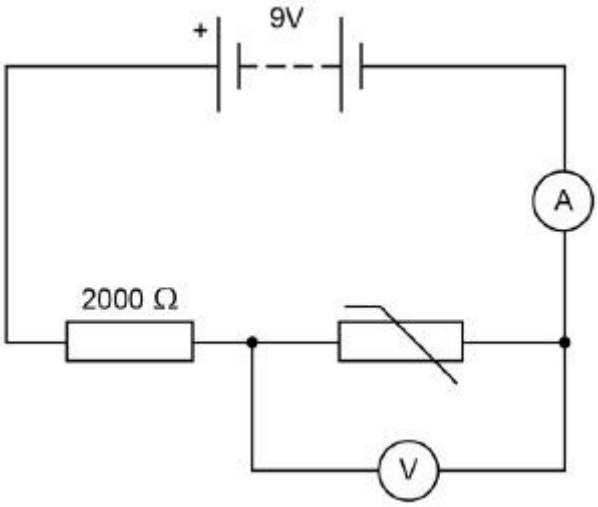

(a) What quantity does the ammeter measure?

_____

(1)

(b) The current in the circuit is 3.5 mA when the potential difference across the thermistor is 4.2 V

Calculate the resistance of the thermistor.

_____

_____

_____

Resistance = _____ Ω

(3)

(c) Calculate the charge that flows through the thermistor in 5 minutes when the current is 3.5 mA.

_____

_____

_____

Charge = _____ C

(3)

(d) Explain why the potential difference across the thermistor changes as the temperature in the house decreases.

_____

_____

_____

_____

(2)

(e) The circuit shown in the diagram can be modified to turn lights on and off by replacing the thermistor with a Light Dependent Resistor (LDR).

Draw the circuit symbol for an LDR in the space below.

(1)

(Total 10 marks)

Tutorial 1 – Current and Circuit Symbols

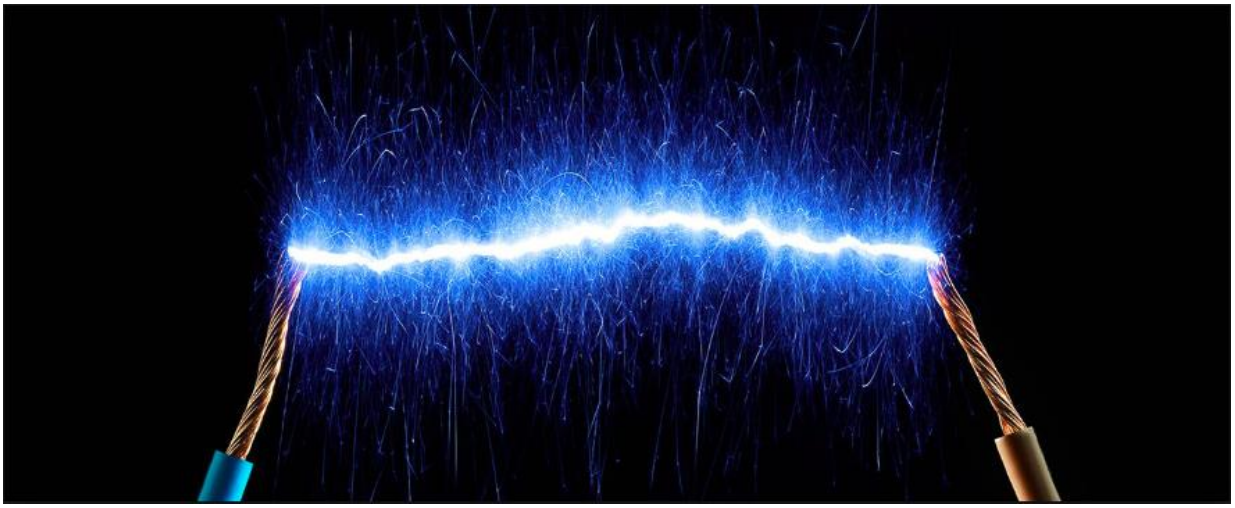

Objectives of Tutorial 1

A. Defining Current
B. Calculating Current
C. Drawing and Interpreting Circuit Diagrams

Objective A: Defining Current

Current is defined as the rate of flow of electric charge around a circuit. The equation definition is Q = I x t, where:

- Q is charge (in units of coulombs[C])
- I is current (in units of amperes [A])
- t is time (in units of seconds [s])

Study tip
Be able to rearrange the subject of equation and apply it.

Note: A current has the same value at any point in a single closed loop.

Practice A: Defining Current

1. State the equation for current in words.

2. Rearrange the subject of the equation to be current.

3. Explain using a diagram the definition of current.

4. Explain why there in no current in the circuit?

Assessment A: Defining Current

Which statements are incorrect?

A	Current has the same value everywhere in the circuit diagram.
B	Current in a circuit is always direct currrent.
C	The rate of flow of charge is not dependent on time.
D	Current flows in the same direction.

A	If time is given in minutes we must always convert to seconds.
B	When current is the subject of the equation t is divided by Q.
C	If charge remains constant when I increases, t must decrease. Prove it!
D	Q = A x s

Objective B: Calculating Current

Worked Example 1
A charge of 500 C flows through a circuit in 5 seconds. Calculate the electric current in the circuit.

What is given?

Charge (Q)	500 C
Time (t)	5 s
What am I solving for?	
Current (I)	? Units = ?

Study tip
The subject of the equation is what you are solving for.

Given charge and time we rearrange the subject of the equation to be I:

I = Q / t

We substitute the values in our table:

I = 500 C / 5 s
I = 100 Amperes (A)

Worked Example 2
A current of 2A flows through a light bulb for 2 minutes. Calculate the charge that passes through the light bulb.

What is given?

Current (I)	2 A
Time (t)	2 minutes
What am I solving for?	
Charge (Q)	? Units = ?

Given that the subject of the equation is charge we do not need to rearrange the equation, however a closer look at what is given, more specifically time shows that we must convert it to seconds:

60 seconds = 1 minutes
120 seconds = 2 minutes Therefore Time (t) is 120 s

Q = I x t
Q = 2 A x 120 s
Q = 240 Coulombs (C)

Practice B: Calculating Current

1. A lamp has a current of 50A flowing through it for 3 minutes. Calculate the charge that is passing through the lamp.

2. A car engine requires a battery that can produce a current of 50A to start. The mechanic places a battery that can discharge 200C in 55s into a car. Will this battery be good enough to start the car? Explain your answer.

3. The charge on a capacitor is 250, 000 C, it takes 8 minutes to fully discharge. What current can be supplied by the capacitor?

4. A closed circuit has a current of 5A flowing with a charge of 125 C. How long does it take for a total of 575 C to flow around the circuit?

Assessment B: Calculating Current

1. Calculate the current flowing through a wire in 6 minutes if the charge is 750C.

What is given?

What am I solving for?	
	? Units = ?

2. Calculate the charge from the following values:
   a. I = 30 A and t = 25 s
   b. I = 3500 A and t = 4 minutes
   c. I = 25,000 A and t = 15 minutes
   d. I = 450 mC and t = 2 minutes

Objective C: Drawing and Interpreting Circuit Diagrams

Pupils are required to draw and interpret circuit diagrams. Here are the standard symbols that you must commit to memory. There are 14 in total.

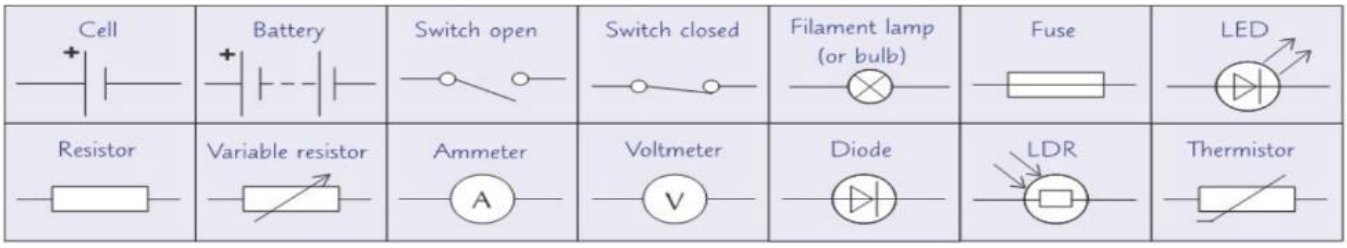

Figure 1.1: Components of Circuits

Practice C: Drawing and Interpreting Circuit Diagrams

For this section practice drawing the more complicated circuit diagrams. The typical symbols required are:

LED (Light Emitting Diode)

Thermistor

LDR (Light Dependent Resistor)

Diode

Assessment C: Drawing and Interpreting Circuit Diagrams

1. The diagram shows a temperature sensing circuit used to control a heating system in a house.

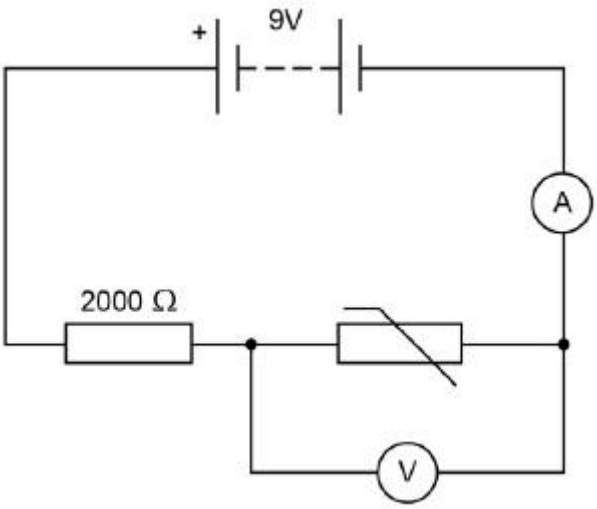

(a) What quantity does the ammeter measure?

_____

(1)

(b) Calculate the charge that flows through the thermistor in 5 minutes when the current is 3.5 mA.

_____

_____

_____

Charge = _____ C

(3)

(e) The circuit shown in the diagram can be modified to turn lights on and off by replacing the thermistor with a Light Dependent Resistor (LDR).

Draw the circuit symbol for an LDR in the space below.

(1)

(Total 5 marks)

2. Figure 1 shows the apparatus used to obtain the data needed to calculate the resistance of a thermistor at different temperatures.

Figure 1

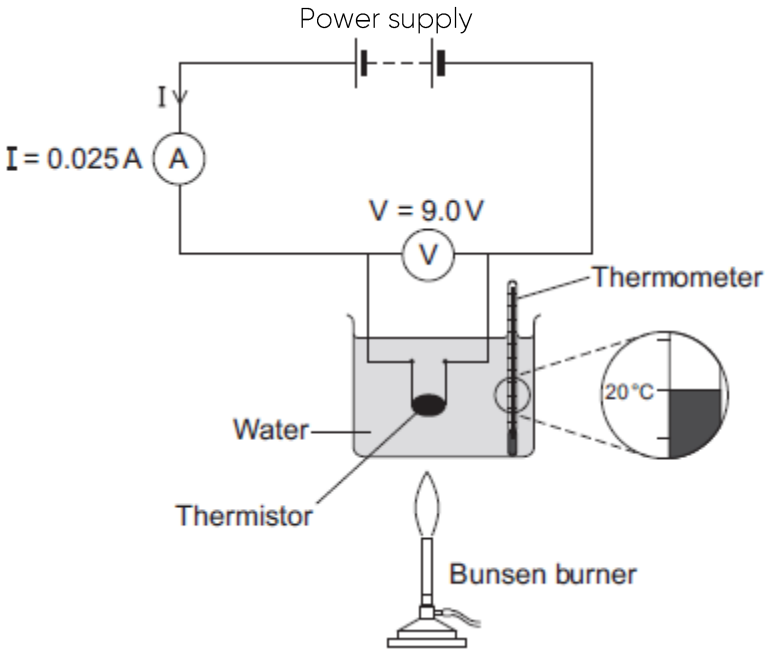

(i) In the box below, draw the circuit symbol for a thermistor.

(1)

(ii) Figure 2 shows the axes for a sketch graph.

Complete **Figure 2** to show how the resistance of the thermistor will change as the temperature of the thermistor increases from 20 °C to 100 °C.

Figure 2

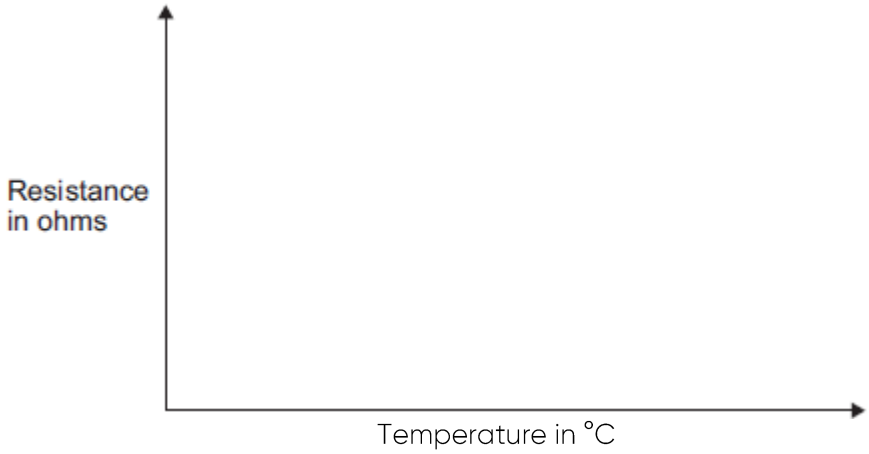

(1)

(iii) Which **one** of the following is most likely to include a thermistor?

Tick (✓) **one** box.

An automatic circuit to switch a plant watering system on and off. ☐

An automatic circuit to switch an outside light on when it gets dark. ☐

An automatic circuit to switch a heating system on and off. ☐

(1)

(b) The ammeter used in the circuit has a very low resistance.

Why is it important that ammeters have a very low resistance?

_____

_____

(1)

(c) A student plans to investigate how the resistance of a light-dependent resistor (LDR)

changes with light intensity.

The student starts with the apparatus shown in Figure 2 but makes three changes to the apparatus.

One of the changes the student makes is to replace the thermistor with an LDR.

Describe what other changes the student should make to the apparatus.

_____

_____

_____

_____

(2)

(Total 6 marks)

3. The diagram shows a simple circuit.

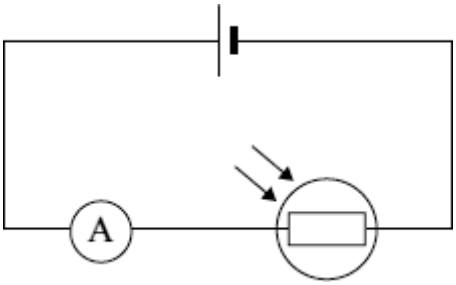

(a) The circuit includes an LDR.

What do the letters LDR stand for?

Draw a ring around your answer.

Light-dependable resistor Light-dependent resistor Light-direct resistor

(1)

(b) The graph shows how the resistance of an LDR changes with light intensity.

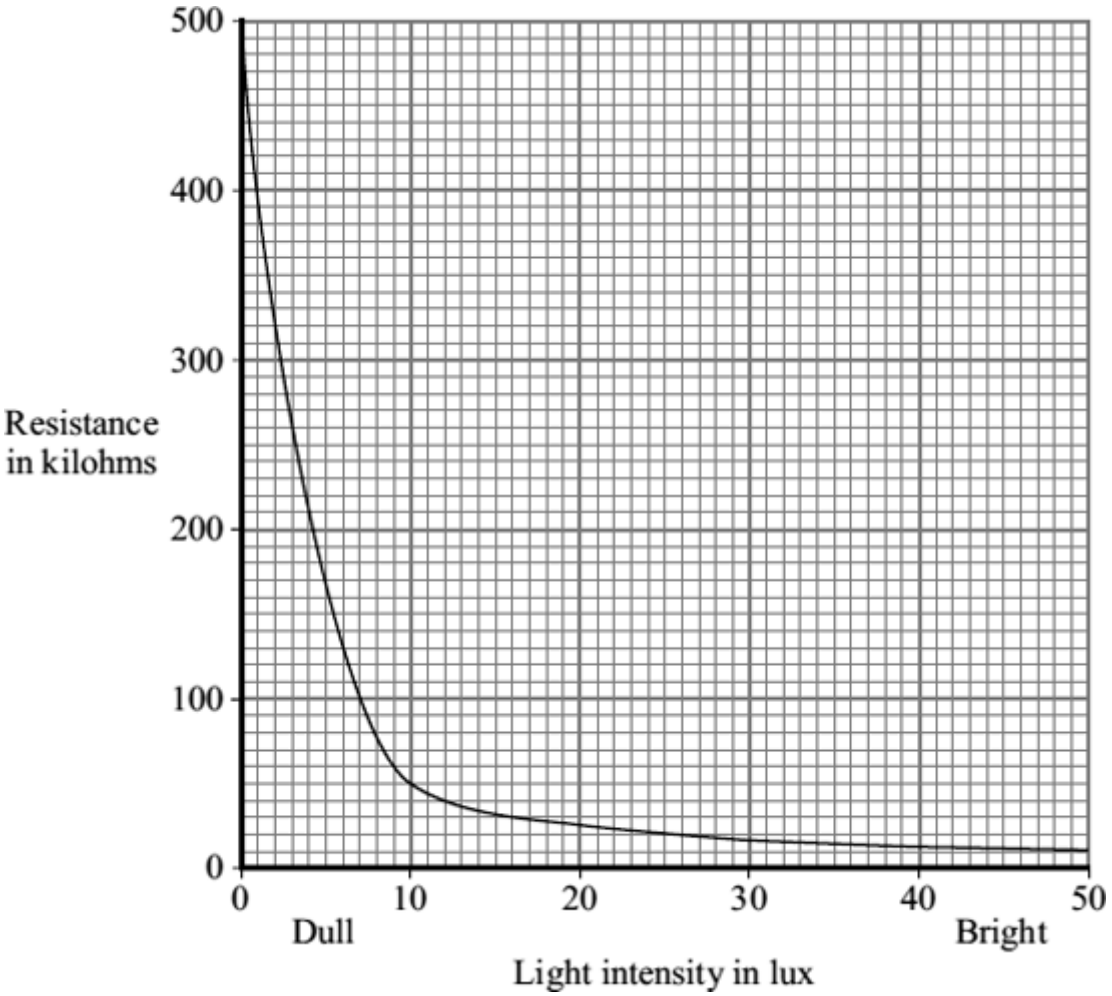

Describe in detail how the resistance of the LDR changes as the light intensity increases from 0 to 50 lux.

_____

_____

_____

_____

_____

_____

(3)

(c) (i) Complete the following sentence by drawing a ring around the correct line in the box.

A decrease in the light intensity of light on the LDR will

Decrease	Not change	Increase

reading on the ammeter.

(1)

(ii) Give a reason for your answer to part (c)(i).

_____

_____

(1)

(d) An LDR can be used to switch a circuit on and off automatically.

In which **one** of the following would an LDR be used?

Put a tick (✓) in the box next to your answer.

a circuit to switch on central heating when it gets cold ☐

a circuit to switch on security lighting when it gets dark ☐

a circuit to switch on a water sprinkler when the soil in a greenhouse is dry ☐

(1)

(Total 7 marks)

Tutorial 2 – Resistance and Potential Difference

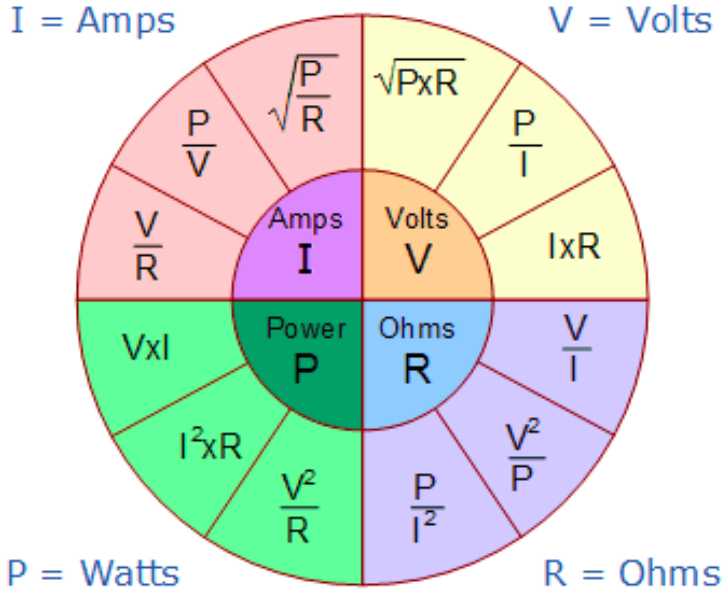

Figure 2.1: Ohm's Law Pie Chart. Use this equation pie chart to understand how the relationships of Ohm's Law basic fundamentals links the topics of Electricity.

Objectives of Tutorial 2

A. Defining Ohm's Law
B. Calculating Resistance, Potential Difference and Current
C. Interpreting Ohmic and Non-Ohmic Graph Relationships

Objective A: Defining Ohm's Law

Current is dependent on the resistance of the component and the potential difference across the component. The equation definition, referred to as **Ohm's Law** is **V = I x R**, where:

- V is potential difference (in units of Volts [V])
- I is current (in units of amperes [A])
- R is resistance (in units of ohms [Ω])

Note: The greater the resistance of the component, the smaller the current for a given potential difference across the component.

> Study tip
> The term potential difference is the same as voltage.

Ohm's law links the potential difference and resistance, by knowing this one equation and how to apply it in problems you will be able to solve numerous problems on electricity. Let's investigate how.

When the current through some components is changed, the resistance will also change.

Ohmic Conductor – The resistance does **NOT** change with the current, R remains constant in V = I x R! At a constant temperature the current flowing through an Ohmic conductor is directly proportional to the potential difference across it.

Non-Ohmic Conductor – The resistance DOES change with the current, R is not constant in V = I X R. Components such as lamps, diodes, thermistors and LDRs experience this phenomena.

Practice A: Defining Ohm's Law

1. For a fixed potential difference how does the current vary with the resistance?

2. Explain what happens to resistance and current in a filament lamp when an electric charge flow through the lamp.

3. For a diode, what does the resistance depend on?

4. Explain the type of graph you would expect for an Ohmic conductor and a Non-Ohmic conductor.

Assessment A: Defining Ohm's Law

1. During your studies, you participated in a practical where you had to investigate factors affecting resistance. Explain using scientific keywords what your findings were. Be as detailed and specific, you must also draw a graph.

Objective B: Calculating Resistance, Potential Difference and Current

Worked Example 1

A stove has a charge of 10,000 C that flows through its circuit in 35 seconds. Calculate the electric current in the circuit. If the potential difference applied is 240 V, what resistance should we expect in the circuit?

What is given?

Charge (Q)	10,000 C
Time (t)	35 s
Potential Difference (V)	240 V
What am I solving for?	
Current (I)	? Units = ?
Resistance (Ω)	? Units = ?

Study tip
The subject of the equation is what you are solving for.

Given charge and time we rearrange the subject of the equation to be I:

I = Q / t

We substitute the values in our table:

I = 10,000 C / 35 s
I = 285.7 Amperes (A)

Now that we have a value for I, we apply Ohm's Law.

V = I x R

Again from our table we must rearrange the subject of the equation to be R:

R = V / I
R = 240 V / 285.7
R = 0.8 Ω

Worked Example 2
Calculate the potential difference across a filament lamp if the resistance of the bulb is 550 ohms and the charge held in 5 minutes is 1500 C.

What is given?

Resistance (Ω)	550 Ohms
Time (t)	5 minutes
Charge (Q)	1500 C
What am I solving for?	
Potential Difference (V)	? Units = ?
Current (I)	? Units = ?

Given charge and time we rearrange the subject of the equation to solve for I:

I = Q / t

We substitute the values in our table:

I = 1500 C / 5 minutes

Be cautious, we are given time in minutes and thus have to convert it to seconds.
60 seconds = 1 minutes
Therefore Time (t) 5 minutes = 5 x 60 s = 300 s

I = 1500 C / 300 s
I = 5 Amperes (A)

Study tip
Pay attention to what examiners give you and the question they ask.

Study tip
Fill out the table as you solve the problem.

Now that we have a value for I, we apply Ohm's Law. We do not need to rearrange the equation.

V = I x R
V = 5 A x 550 Ω
V = 2,750 V

Worked Example 3
Calculate the current flowing through a wire if the battery is a 230 V battery and the resistance of the wire is 45 Ohms.

What is given?

Resistance (Ω)	45 Ohms
Potential Difference (V)	230 V
What am I solving for?	
Current (I)	? Units = ?

This problem by now should be extremely straightforward to solve using the table method.

V = I x R
I = V / R
I = 230 V / 45 Ω
I = 5.1 A

Practice B: Calculating Resistance, Potential Difference and Current

1. Calculate the potential difference across a resistor if its resistance is 90 ohms and the charge held in 3 minutes is 3500 C.

2. A power drill has a charge of 7,000 C that flows through its circuit in 3 minutes 20 seconds. Calculate the electric current in the circuit if the potential difference applied is 120 V. What resistance should we expect in this circuit?

Assessment B: Calculating Resistance, Potential Difference and Current

In a given circuit an ammeter has a reading of 8A and a resistor has a resistance of 40 ohms. The wire begins to heat up and the resistance doubles. What is the potential difference across the circuit after 5 minutes? How would you increase the power of the circuit?

Objective C: Interpreting Ohmic and Non-Ohmic Graphs Relationships

Graphs are the tools that scientist use to compare and analyse relationships.
In order for us to interpret how circuit components behave, we plot the characteristics of Current-Voltage (I-V) graphs.

Plot the data in the table on the graph given. Be sure to use appropriate axes. What relationship do you observe?

Current (A)	Potential Difference (V)
0.25	5
0.20	4
0.15	3
0.10	2
0.05	1

0.00	0

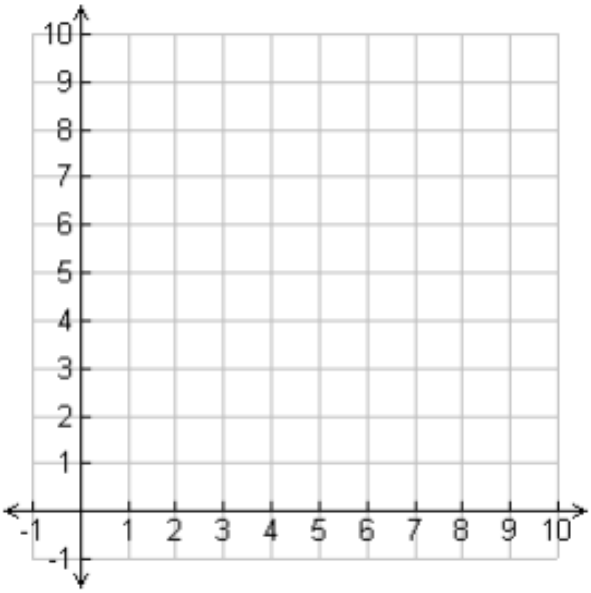

The three main graphs to know are given below:

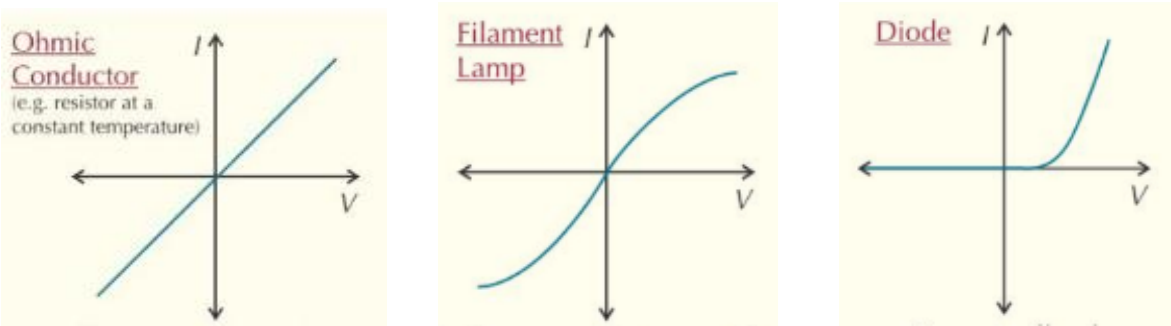

Figure 2.2: Current-Voltage (I-V) Graphs.

The I-V characteristic graphs demonstrate how the current (I) flowing through a circuits component changes as the potential difference (V) is increased.

> Study tip
> Plot these values on the graph.
> Mastering graphs are essential.

Ohmic Conductor – A **linear** graph where the current through the Ohmic conductor is **directly proportional** to the potential difference.

Filament Lamp – A **non-linear** curved graph affected by temperature. As temperature increases so to does the resistance. Therefore less current can flow per unit potential difference and a curve is formed.

Diode – The I-V characteristic of a diode is simple. **Current only flows in one direction**. In the reverse direction there is a very high resistance.

The blue line on the graphs in Figure 2.2 represent the resistance, R. Thus you can calculate the resistance using the graphs.

Practice C: Interpreting Ohmic and Non-Ohmic Graphs Relationships

Worked Example 1

Describe the relationship between resistance and light intensity for a light-emitting resistor. Draw the graphic relationship to clearly as you articulate your answer.

An LDR's resistance varies with the intensity of light. As the intensity increases the resistance will decrease, decaying exponentially. In contrast, when there is no light intensity the resistance increases rapidly.

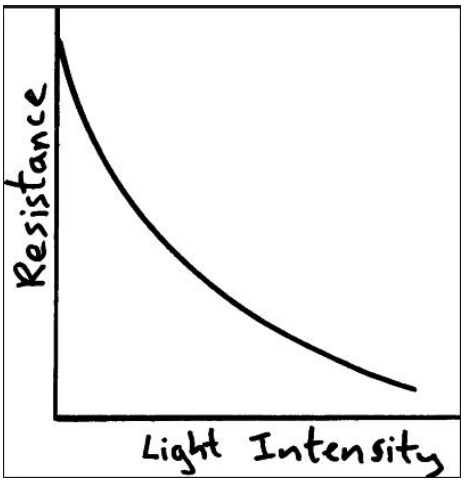

Assessment C: Interpreting Ohmic and Non-Ohmic Graphs Relationships

1. Describe what happens with the resistance of a thermistor as temperature decreases. Draw the graphic relationship to clearly as you articulate your answer.

Tutorial 3 – Series Circuits

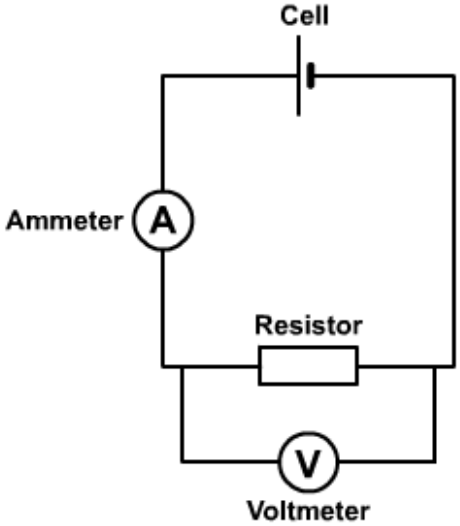

Objectives of Tutorial 3

A. Definition of Series Circuit
B. Calculating Values of Components

Objective A: Definition of Series Circuits

A series circuit has all of its components connected in a line. The only component that is NOT connected in a line is the voltmeter; they are connected in parallel, more on this in the next tutorial.

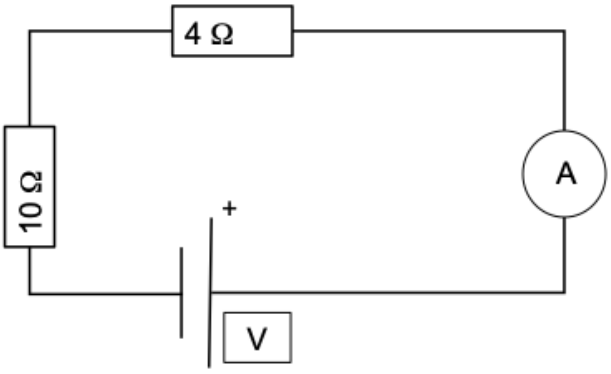

Figure 3.1: A Series Circuit

Four key points:

1. The potential differences of cells are added up when more cells are connected in series.

2. The total potential difference is shared between the various components. This is represented by the equation:

$V_{TOTAL} = V_1 + V_2 + V_n$

3. The same current flows through all components in the circuit. This is represented by the equation:

$I_1 = I_2 = I_n$

4. The total resistance of components is the sum of their resistances. This is represented by the equation:

$R_{TOTAL} = R_1 + R_2 + R_n$

Note: When resistors are added in series they must share the potential difference.

Practice A: Definition of Series Circuits

1. Given a circuit with a fixed potential difference, what will happen to the current if you increased the resistance?

A	The current remains the same
B	The current increases
C	The current decreases

2. In your own words and by drawing a diagram, give the definition of a series circuit.

3. A circuit has a filament bulb with a resistance of 5 ohms and a cell with a potential difference of 1.5 V has been given to you. What do you need to do to increase the current to 1.5 A? Draw a diagram to strengthen your argument.

4. Describe what happens to the current when you change the wires connected to the power box that has a potential difference of 6 V.

Assessment A: Definition of Series Circuits

Which statements are incorrect?

A	When the potential difference across a resistor is lower the current is lower
B	Ammeters are connected in parallel and series depending on the circuit
C	Adding a resistor to a circuit reduces the total current and increases resistance
D	The magnitude or size of the current for a circuit is $I = V_{TOTAL} / R_{TOTAL}$

Objective B: Calculating Values of Components

Worked example 1

Given the circuit in Figure 3.1, calculate the current passing through the circuit if the potential difference is 30 V. The resistance across the ammeter is negligible.

Study tip
The four key points are important when it comes to the National Grid.

What is given?

Resistance 1(Ω)	4 Ohms
Resistance 2(Ω)	10 Ohms
Potential Difference (V)	30 V

What am I solving for?	
Total Resistance (R)	? Units = ?
Current (I)	? Units = ?

From <u>point 4</u>, we know that the sum of the resistors needs to be added together.

$R_{TOTAL} = R_1 + R_2$
$R_{TOTAL} = 4\ \Omega + 10\ \Omega$
$R_{TOTAL} = 14\ \Omega$

Now we need to use Ohm's Law V = I x R and rearrange the subject of the equation to be I.

I = V / R
I = 30 V / 14 Ω
I = 2.1 A

Worked example 2
Given the circuit in the figure below, a voltmeter is used to measure the potential difference across component X that reads 4 V on the voltmeter. Component X is a resistor. Find the resistance of R.

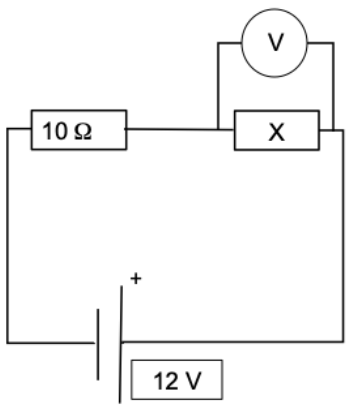

What is given?

Resistor 1 (Ω)	10 Ohms
Potential Difference (V)	12 V
What am I solving for?	
Resistor X (R)	? Units = ?
Current (I)	? Units = ?
Potential Difference	? Units = ?

Recall that the total potential difference is shared. Plugging in the values to the equation.

$V_{TOTAL} = V_1 + V_2$

$12\ V = V_1 + 4\ V$

Rearranging the subject of the equation to be V_2 we obtain the potential difference across the 10 ohm resistor.

$V_1 = 12\ V - 4\ V$
$V_1 = 8\ V$

Now that we know R and V for our 10 ohms resistor, we can solve for the current.

I = V / R = 8 V / 10 Ω
I = 0.8 A

Note: This current is the same current throughout the circuit, therefore we solve resistor X.

R = V / I = 4 V / 0.8 A
R = 5 Ω

Worked example 3

This circuit contains three resistors, R 1, R 2 and R 3 with a potential difference of 90 V applied to the circuit. What is the potential difference and total current across each resistor? What is the total resistance of the circuit?

Note: P.D. is potential difference.

In order to solve this problem we create a table to answer the two questions we have been asking.

What is given?

These values are written in the table.

What am I solving for?

These values are left blank with a question mark and shaded blue.

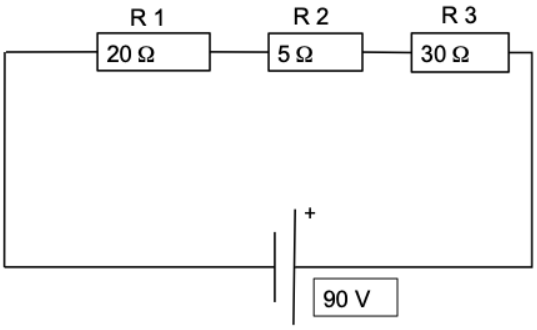

Resistance	Values Ω	Current	Values A	P.D.	Values V
R_{TOTAL}	?	I_{TOTAL}	?	V_{TOTAL}	90
R_1	20	I_1	?	V_1	?
R_2	5	I_2	?	V_2	?
R_3	30	I_3	?	V_3	?

Applying the FOUR KEY points we solve for RTOTAL given that $R_{TOTAL} = R_1 + R_2 + R_3$

Using the table we calculate

$R_{TOTAL} = 55\ \Omega$

We can now solve for the total current as we have both the total resistance and total potential difference. By Ohm's law I = V / R.

$I_{TOTAL} = 1.64$ A

Recall that our circuit is in series; therefore the current is the same across all components! $I_{TOTAL} = I_1 = I_2 = I_3 = 1.64$ A

Now we can solve for V1, V2 and V3 using Ohm's Law.

Resistance	Values Ω	Current	Values A	P.D.	Values V
R_{TOTAL}	55	I_{TOTAL}	1.64	V_{TOTAL}	90
R_1	20	I_1	1.64	V_1	32.8
R_2	5	I_2	1.64	V_2	8.2
R_3	30	I_3	1.64	V_3	49.2

Study tip

The values for P.D. should equal 90; in the case we get 90.2.

Assessment B: Calculating Values of Components

Solve the circuits. What is the potential difference and total current across each resistor? What is the total resistance of the circuit?

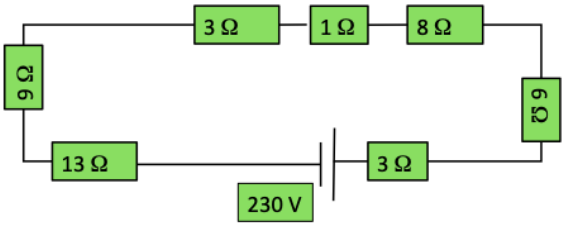
3 Ω
1 Ω
8 Ω
6 Ω
6 Ω
13 Ω
3 Ω
230 V

Tutorial 4 – Parallel Circuits

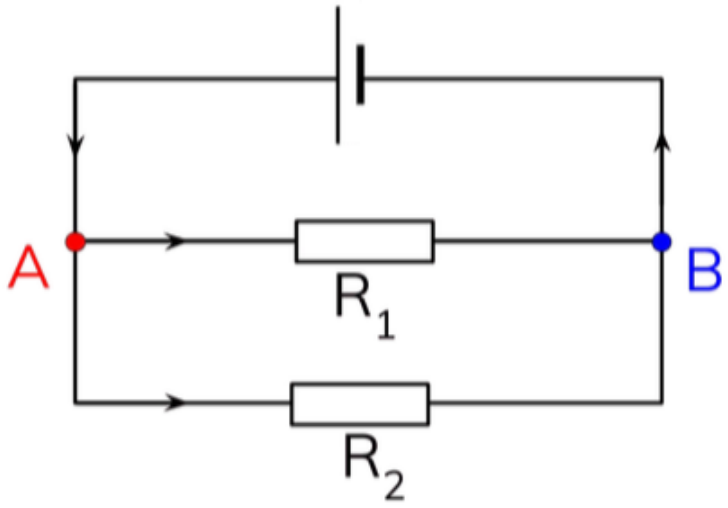

Objectives of Tutorial 4

A. Definition of Parallel Circuit
B. Calculating Values of Components

Objective A: Definition of Parallel Circuit

A parallel circuit has all of its components separately connected to the potential difference supply. The only component that is NOT connected in parallel is the ammeter; they are connected in series.

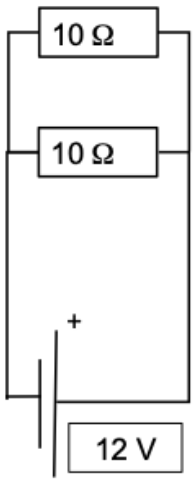

Three key points:

1. The potential difference is the same across all components. This is represented by the equation:

$V_1 = V_2 = V_n$

2. The current is shared through all components in the circuit; it branches off. This is represented by the equation:

$I_{TOTAL} = I_1 + I_2 + I_n$

3. The total resistance of components is the inverse sum of their resistances. This is represented by the equation:

$1 / R_{TOTAL} = 1 / R_1 + 1 / R_2 + 1 / R_n$

Practice A: Definition of Parallel Circuit

1. Given a circuit with a fixed potential difference, what will happen to the current if you increased the resistance?

A	The current remains the same
B	The current increases
C	The current decreases

2. Bulbs connected in parallel will?

A	Remain at the same brightness
B	Varying in brightness
C	Decrease in brightnesses

3. If you had two resistors connected in parallel the same current will flow through each component.

A	True
B	False

4. Parallel circuits have junctions where the current splits or branches off and then re-join.

A	True
B	False

5. Given two resistors in parallel, the total resistance is less than the resistance of the _____ of the two resistors.

A	Largest
B	Smallest
C	Sum

Assessment A: Definition of Parallel Circuit

You want to investigate what happens when you add resistors in series and in parallel. Explain what you will do in order to carry out the practical. Be detailed and specific using scientific vocabulary. Remember to plot a graph to strengthen your reasoning.

Objective B: Calculating Values of Components

Worked example 1

Given the parallel circuit in the figure with two resistors of 8 ohms and 16 ohms, a supply of 12 V, three ammeters and two voltmeters. Determine the readings on V_1 and V_2. Calculate the currents through A_1 and A_2. Finally, calculate the current from the supply.

What is given?

Resistance 1(Ω)	8 Ohms
Resistance 2(Ω)	16 Ohms
Potential Difference (V)	12 V
What am I solving for?	
V_1	? Units = ?
V_2	? Units = ?
A_1	? Units = ?
A_2	? Units = ?
Current (I) A_3	? Units = ?

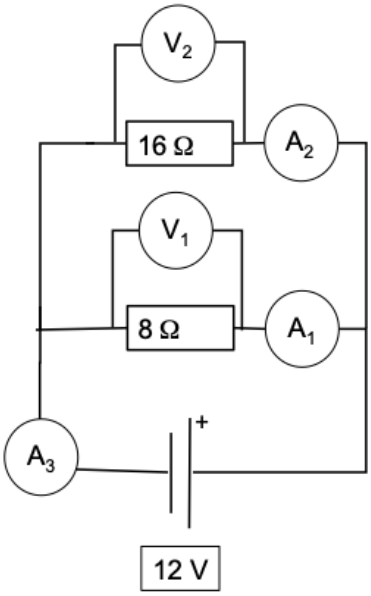

The first step is to record what we were given and what we are solving for. Applying the THREE KEY points for parallel circuits we know that the potential difference is the same across all components. Therefore $V_1 = V_2 = V_{TOTAL} = 12$ V

Next applying Ohm's Law V = I x R we rearrange the subject of the equation to be I and solve for A_1 and A_2.

A_1: I = V / R = 12 V / 8 Ω = 1.5 A

A_2: I = V / R = 12 V / 16 Ω = 0.75 A

To conclude, because we have learnt that in parallel circuits that the current splits, $A_3 = A_1 + A_2$

A_3 = 1.5 A + 0.75 A = 2.25 A

Practice B: Calculating Values of Components

Draw a circuit diagram consisting of a 15 V supply as read by a voltmeter and two resistors with values of 25 ohms and 50 ohms. A voltmeter is connected in parallel with the 25 ohm resistor and the current of the branch is 2.5 A as read by an ammeter. The 50 ohms resistor is also connected in series with an ammeter, however there is no reading. Connect and ammeter to record the total current of the circuit.

Assessment B: Calculating Values of Components

Question 1

The picture shows an electric cooker hob. The simplified circuit diagram shows how the four heating elements connect to the mains electricity supply. The heating elements are identical.

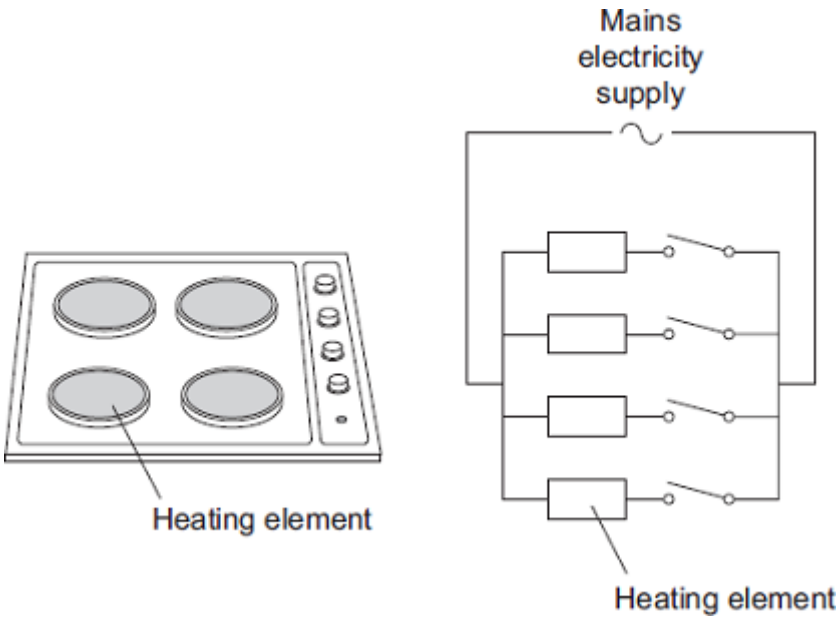

When all four heating elements are switched on at full power the hob draws a current of 26 A from the 230 V mains electricity supply.

(a) Calculate the resistance of one heating element when the hob is switched on at full power.

Give your answer to 2 significant figures.

_____

_____

_____

Resistance = _____ Ω

(3)

(b) The table gives the maximum current that can safely pass through copper wires of different cross-sectional area.

Cross-sectional area in mm^2	Maximum safe current in amps
1.0	11.5
2.5	20.0
4.0	27.0
6.0	34.0

The power sockets in a home are wired to the mains electricity supply using cables containing 2.5 mm^2 copper wires. Most electrical appliances are connected to the mains electricity supply by plugging them into a standard power socket.

It would **not** be safe to connect the electric cooker hob to the mains electricity supply by plugging it into a standard power socket.

Why?

_____

_____

_____

_____

(2)

(c) Mains electricity is an alternating current supply. Batteries supply a direct current.

What is the difference between an alternating current and a direct current?

_____

_____

_____

_____

(2)

(Total 7 marks)

Tutorial 5 – Exam Techniques

Objectives of Tutorial 5

- The Feynman Technique
- Time Techniques

Objective A: The Feynman Technique

The technique is as followed:

1. Select and study a topic.
2. Explain the topic to someone who is unfamiliar with the topic using simple language.
3. Identify any gaps in your understanding.
4. Return to the literature to understand better.
5. Repeat steps 2 to 4 as necessary, each time improving your explanation.

Objective B: Time Techniques

Day One
Practice solving a problem in detail with a timer.

Day Two
Solve the same problem without looking at your notes and take one minutes off of your original time. Apply the same level of detail.

Day Five
Again solve the same problem however, this time remove two minutes from your time on Day two. Apply the same level of detail.

Day Seven
Solve the problem once more. Use the timer to time the length it has taken to correctly solve it in detail.

In all test feeling anxiety is normal, proper preparation and practice can help to alleviate the stresses associated with anxiety on the day of the exam.

Tutorial 6 – Final Assessment 30 minutes

Question 1

(a) Draw **one** line from each circuit symbol to its correct name.

Circuit symbol	Name
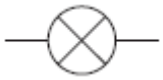	Diode
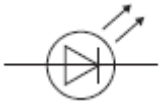	Light-dependent resistor (LDR)
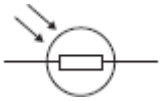	Lamp
	Light-emitting diode (LED)

(3)

(b) Figure 1 shows three circuits.

The resistors in the circuits are identical.

Each of the cells has a potential difference of 1.5 volts.

Figure 1

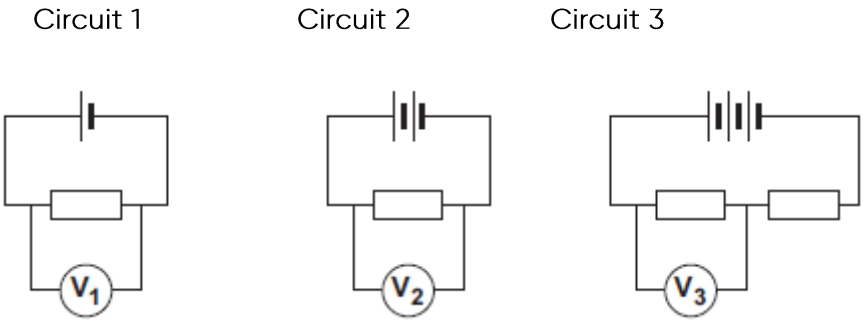

(i) Use the correct answer from the box to complete the sentence.

half twice the same as

The resistance of **circuit 1** is _____ the resistance of **circuit 3**.

(1)

(ii) Calculate the reading on voltmeter V_2.

_____

Voltmeter reading V_2 = _____ V

(1)

(iii) Which voltmeter, V_1, V_2 or V_3, will give the lowest reading?

Draw a ring around the correct answer.

V_1 V_2 V_3

(1)

(c) A student wanted to find out how the number of resistors affects the current in a series circuit.

Figure 2 shows the circuit used by the student.

Figure 2

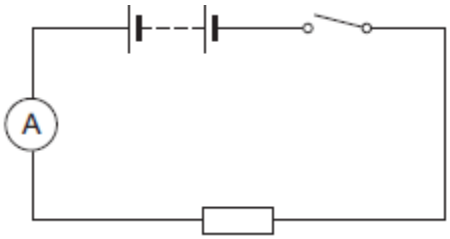

The student started with one resistor and then added more identical resistors to the circuit.

Each time a resistor was added, the student closed the switch and took the ammeter reading.

The student used a total of 4 resistors.

Figure 3 shows three of the results obtained by the student.

Figure 3

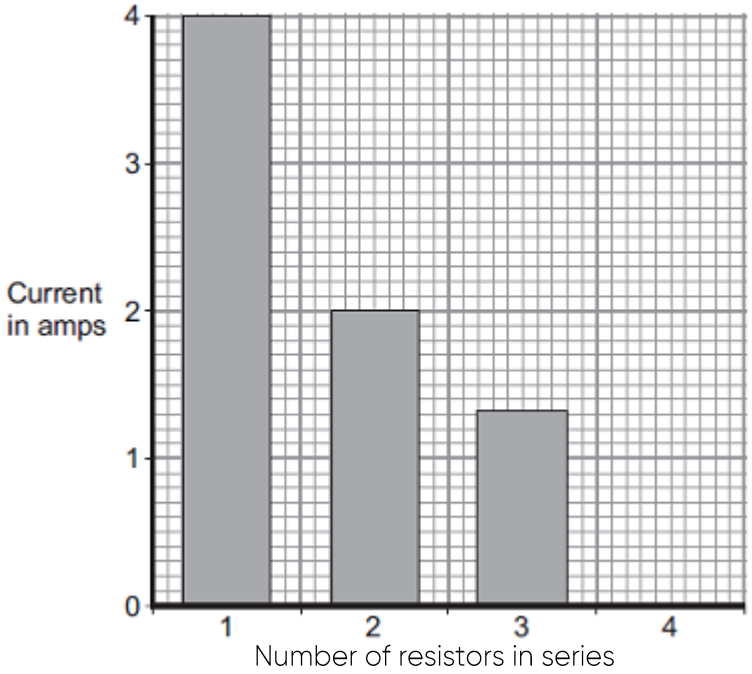

(i) To get valid results, the student kept one variable the same throughout the experiment.

Which variable did the student keep the same?

_____

(1)

(ii) The bar chart in **Figure 3** is not complete. The result using 4 resistors is not shown.

Complete the bar chart to show the current in the circuit when 4 resistors were used.

(2)

(iii) What conclusion should the student make from the bar chart?

_____

_____

(1)

(Total 10 marks)

Question 2

(a) The diagram shows the circuit that a student used to investigate how the current through a resistor depends on the potential difference across the resistor.

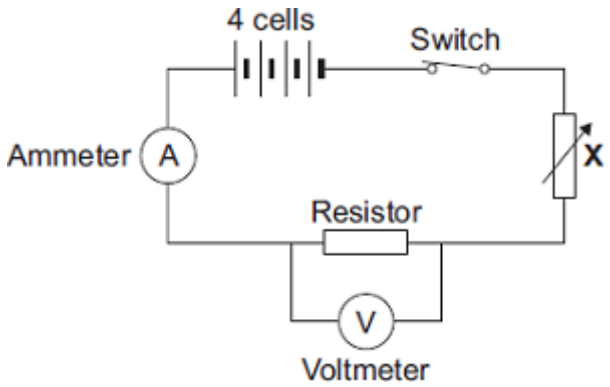

(i) Each cell provides a potential difference of 1.5 volts.

What is the total potential difference provided by the four cells in the circuit?

_____

Total potential difference = _____ volts

(1)

(ii) The student uses the component labeled X to change the potential difference across the resistor.

What is component X?

Draw a ring around your answer.

light-dependent resistor thermistor variable resistor

(1)

(iii) Name a component connected in parallel with the resistor.

_____

(1)

(b) The results obtained by the student have been plotted on a graph.

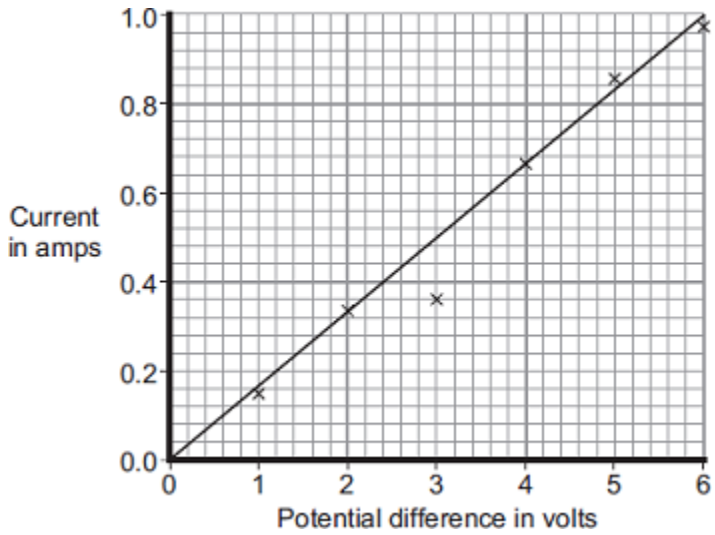

(i) One of the results is anomalous.

Draw a ring around the anomalous result.

(1)

(ii) Which **one** of the following is the most likely cause of the anomalous result?

Put a tick (✓) in the box next to your answer.

The student misread the ammeter. ☐

The resistance of the resistor changed. ☐

The voltmeter had a zero error. ☐

(1)

(iii) What was the interval between the potential difference values obtained by the student?

_____

_____

(1)

(c) Describe the relationship between the potential difference across the resistor and the current through the resistor.

_____

_____

(1)

(Total 7 marks)

Question 3

(a) Figure **1** shows the inside of a battery pack designed to hold three identical 1.5 V cells.

Figure 1

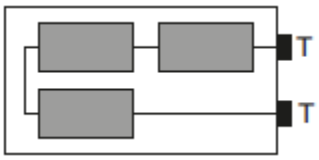

Which **one** of the arrangements shown in **Figure 2** would give a 4.5 V output across

the battery pack terminals T?

Figure 2

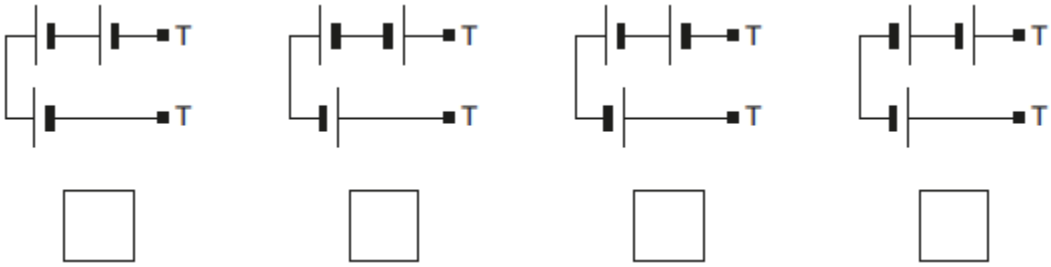

(1)

(b) Figure 3 shows a variable resistor and a fixed value resistor connected in series in a circuit.

Figure 3

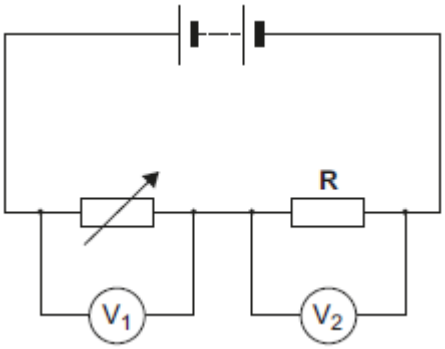

Complete Figure 3 to show how an ammeter would be connected to measure the current through the circuit.

Use the correct circuit symbol for an ammeter.

(1)

(c) The variable resistor can be adjusted to have any value from 200 ohms to 600 ohms.

Figure 4 shows how the reading on voltmeter V_1 and the reading on voltmeter V_2 change as the resistance of the variable resistor changes.

Figure 4

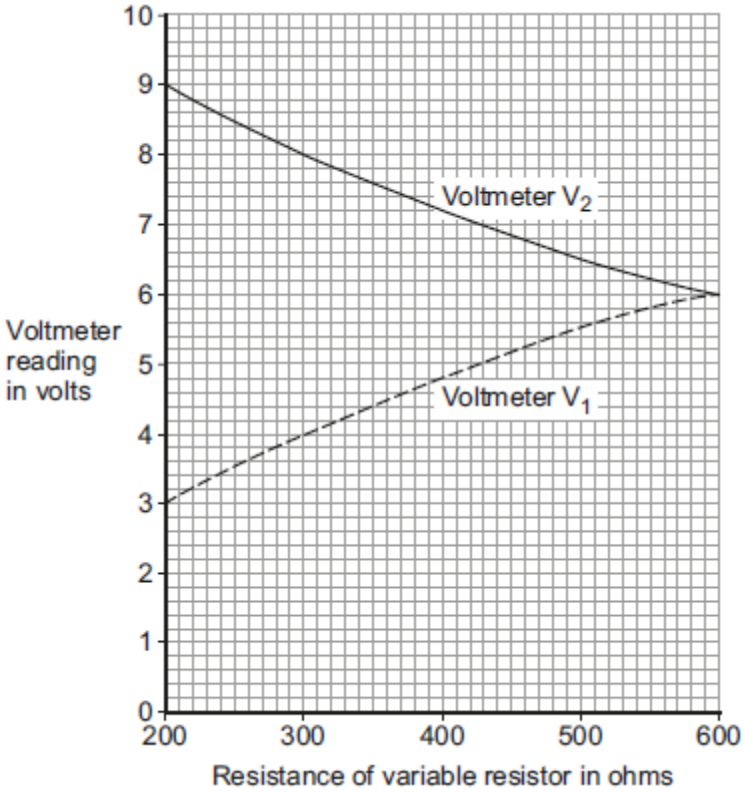

(i) How could the potential difference of the battery be calculated from **Figure 4**?

Tick ( ) **one** box.

9 + 3 = 12 V ☐

9 – 3 = 6 V ☐

9 ÷ 3 = 3 V ☐

Give the reason for your answer.

_____

_____

(2)

(ii) Use **Figure 4** to determine the resistance of the fixed resistor, R.

Resistance of R = _____ Ω

Give the reason for your answer.

_____

(2)

(iii) Calculate the current through the circuit when the resistance of the variable resistor equals 200 Ω.

_____

_____

_____

Current = _____ A

(3)

(Total 9 marks)

Question 4

Figure 1 shows a graph of current against potential difference for a solar cell when light of intensity 450 W/m^2 is incident on it.

Figure 1

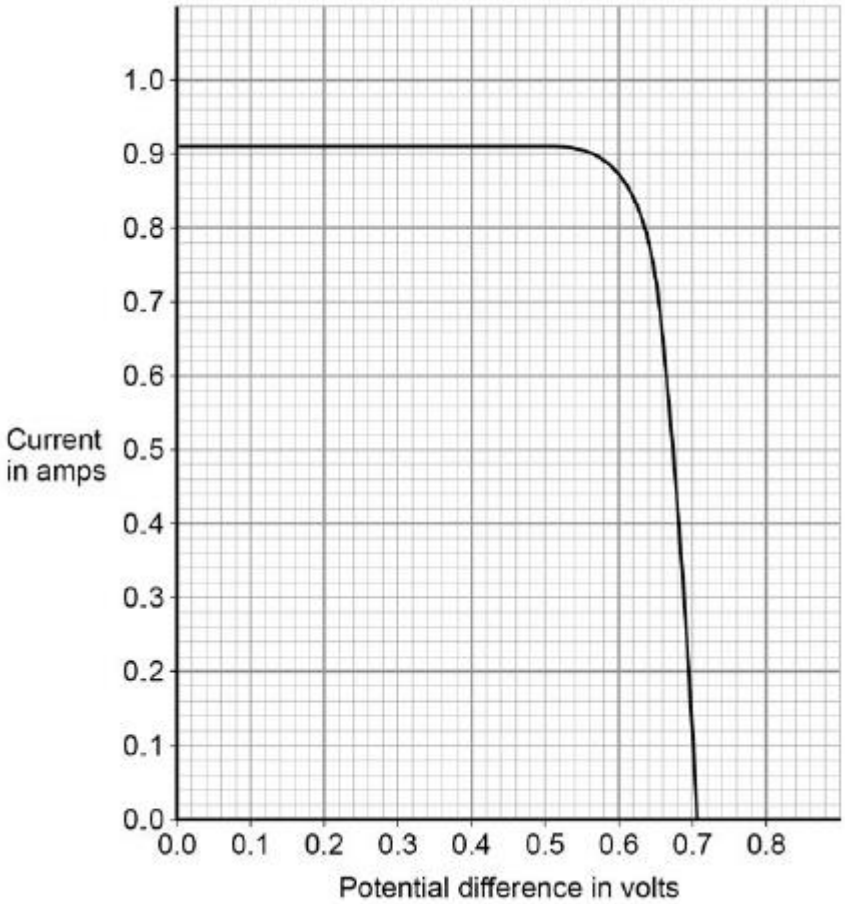

(a) Determine the power output of the solar cell when the potential difference is 0.5 V

Use data from Figure 1.

_____

_____

_____

_____

_____

Power = _____ W

(3)

(b) Draw a sketch graph on **Figure 2** to show how the power output of the solar cell varies with potential difference between 0.1 V and 0.5 V

No values need to be included on the vertical axis.

Figure 2

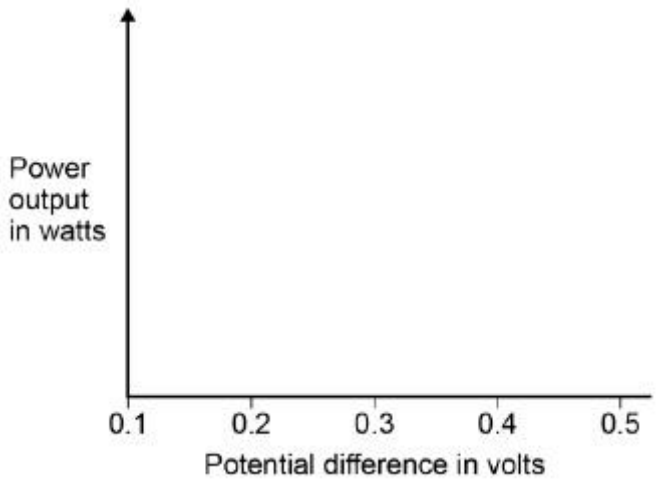

(2)

(c) The maximum power output of this solar cell is 0.52 W

When the light intensity is 450 W/m^2 the cell has an efficiency of 0.15 at the maximum power output.

Calculate the area of the solar cell.

_____

_____

_____

_____

_____

_____

Area = _____ m^2

(4)

(d) A householder has four solar cells.

Each of the solar cells has a resistance of 0.78 Ω

Explain how the solar cells should be connected so that the total resistance is as low as possible.

_____

_____

_____

_____

(2)
(Total 11 marks)

Tutorial 7 - Feedback

What is the Purpose of Tutorial 6?

- To receive feedback on final assignments.
- To share examples of best practice with the other pupils in your group.
- To write targets for improvement in school lessons.
- To reflect on the programme including what was enjoyed and what was challenging.

Final assignment feedback

What I did well...	What I could have improved on...
•	•
•	•
•	•

My target for future work is...

Reflecting on Uni Pathways

What did you most enjoy about Uni Pathways?
•   •   •

What did you find challenging about the programme?	How did you overcome these challenges?
• • •	• • •

Notes

Notes

Electricity

Key Stage 4 Programme

researchersinschools.org