Electrical Circuits

Key Stage 4 Revision Programme

Pupil Name	
Handbook Designed by	Dr Gavin Marshall

Timetable and Assignment Submission

Timetable – Tutorials

Tutorial	Date	Time	Location
1 (Baseline assessment)			
2			
3			
4			
5			
6 (Final assessment)			
7 (Feedback)			

Timetable – Homework Assignments

Tutorial 1		
Tutorial 2		
Tutorial 3		
Tutorial 4		
Tutorial 5		

Contents

Course Rationale	P4
Glossary of Keywords	P5
Tutorial 1	P6
Tutorial 2	P7
Tutorial 3	P12
Tutorial 4	P17
Tutorial 5	P23
Tutorial 6	P29
Tutorial 7	P30

Course Rationale

This set of tutorials is designed to allow students to apply the principles of deliberate practice to the revision of key GCSE topics. Whilst subject matter may be covered in detail in classes, too often students do not have sufficient time to practice in depth the problem solving techniques required to achieve higher marks in their examinations. Further, when they do have time for revision, many students lack the skills to apply effective and structured approaches to their learning. These tutorials will help students prepare for exams in three ways:

- Firstly by covering a challenging topic in in great depth students will have an opportunity to turn a weak unit into one in which they have high confidence.
- Secondly, by applying deeper analysis of physics principles and of the methods for analysing physics questions, students will learn how to approach exam questions analytically and from first principles.
- Finally, by applying deliberate practice and study techniques, students will learn transferable study skills which they will be able to apply to other topics, and hopefully other subjects in their GCSEs.

The topic chosen for these tutorials is "Current, Potential Difference and Resistance". This topic can be a real challenge for students as it contains the most calculation dense section of the GCSE curriculum and is faced at a time when students are not yet familiar with the manipulation of equations. As it is crucial to combine an understanding of the principles behind resistance calculations as well as the practical ability to solve problems including this knowledge, students can become overwhelmed by this section of the curriculum. This is also reflected in poor student performance on questions considering resistance. By applying deliberate practice to the revision of electrical circuit calculations, students will gain a deeper understanding of how the definitions of current, potential difference and resistance combine into the equations we learn, and how they can derive solutions without having to resort to memorisation techniques to succeed in this topic.

Subject Vocabulary

Word	Definition	In a sentence
Current		
Potential difference		
Resistance		
Ohm		

Tutorial 1 – Baseline assessment

What is the Purpose of Tutorial 1?

In the first tutorial we will discuss the purpose of this course and determine what you already understand, so we can focus on the things that you find difficult.

- Pre-SEF
- Baseline assessment

Tutorial 2 – Equations for Current, Potential Difference and Power

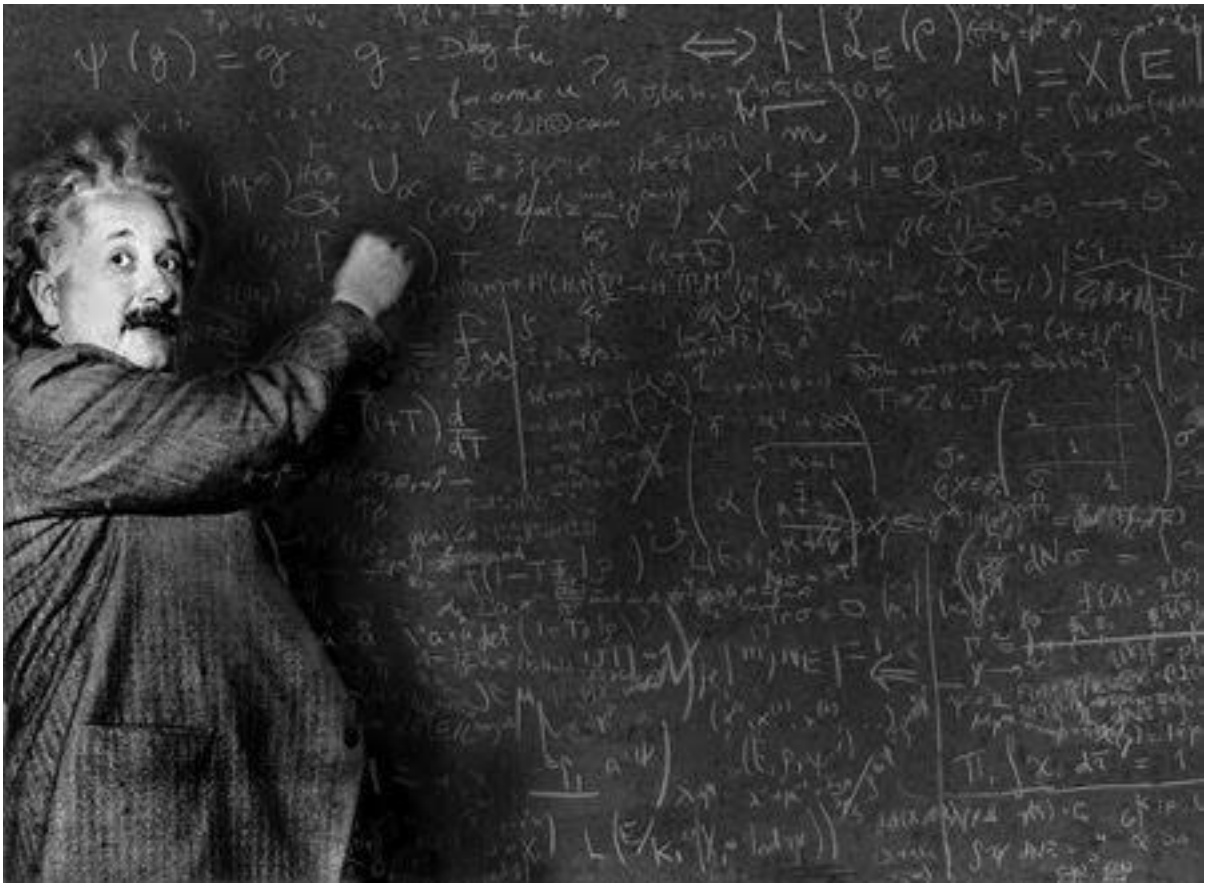

What is the Purpose of Tutorial 2?

By understanding the significance of each variable in terms of the flow or separation of charge, students will learn to derive equations instead of memorising them.
Then, by practicing the rearrangement of equations and substitutions of variables, all other equations can be derived. This practice will become natural and obvious with deliberate structured practice.

T2 Objective A: Defining current, Potential Difference and Power

Current is the rate of flow of charge. Current flows when charged particles, often electrons (but also ions), move from one place to another.
A rate of flow means that something is changing over time. In this case, the charge changes over time. Mathematically this is written as charge divided by time, as follows:

$$Current = \frac{Charge}{time} \qquad or \qquad I = \frac{Q}{t}$$

Where:

Charge is measured in Coulombs (C)
Current is measured in Amps (A)
Time is measured in Seconds (s)

T2 Practice A:

a) Power is defined as the rate of flow of energy. Using the structure above, write the word equation and symbol equation for power. Make sure to note the units of each variable.

b) Potential difference is defined as the amount of energy it would take to move a certain amount of charge. Write the word equation and symbol equation for potential difference.

c) Explain how the equations for power and current are similar. Include an explanation of what a rate of flow is.

d) Current is usually describing the movement of electrons, explain an example of current flow which does not involve electrons.

T2 Assessment A

Which statement or statements about power are false?

a) Power is the flow of energy
b) Power is the transfer rate of current
c) More power flows the same charge transfers in more time
d) If there is more total charge there must be more total power
e) You could calculate the amount of power by measuring a quantity of energy and how much time it took for that energy to transfer.

T2 Objective B: Be able to manipulate and solve equations

In order to solve equations, effectively you should follow these steps:

1. Rearrange the equation to make the variable you need to solve the subject of the equation
2. Check the units of any data you are given, and if necessary convert the data into the correct units
3. Substitute the data into the equation and calculate the final answer.

Equations can be rearranged in order to help us find solutions for any of the variables which exist in the equation. As equations get more complicated it is much easier to rearrange first, before attempting to solve the equation.

For example,
Solve for the charge transferred if two milliamps flow in five seconds.
Starting with the definition of current, we would rearrange to make charge the subject in the following way.

$$I = \frac{Q}{t}$$

Write the original equation

You can multiply one side of the equation by anything, so long as you do exactly the same thing to the other side of the equation.

$$t \times I = \frac{Q}{t} \times t$$

I chose to multiply both sides by time

$$tI = \frac{Qt}{t}$$

The multiplication symbols are unnecessary

$$tI = \frac{Q\cancel{t}}{\cancel{t}}$$

As time/time = 1 you can remove t from the RHS

$$tI = Q$$

You can reorder the terms t make it easier to read.

$$Q = It$$

Charge (Q) is now the subject

You should rearrange the equation before attempting to solve.
Next check the data you are given. As milliamps are not standard units you will need to convert them into the standard units of amps and seconds.
Two milliamps
As 1000 milliamps = 1 amp you can convert the units by multiplying by the following conversion factor:

$$\frac{1A}{1000mA}$$

$$2mA \times \frac{1A}{1000mA}$$

$$\frac{2}{1000}A \times \frac{\cancel{mA}}{\cancel{mA}}$$

$$\frac{2}{1000}A = 0.002A$$

Always convert units before substituting.
You can then substitute and solve the equation

$$I = \frac{Q}{t}$$

$$Q = It$$
$$Q = 0.002A \times 5s$$
$$Q = 0.01As$$

$$Q = 0.01\ C$$

Always write your final answer in the above form. Including what was calculated, the answer and the units.

T2 Practice B

Using the above format, answer the following questions showing as much working as possible.

a) If you have 5A of current and 10C of charge transfer, how long does this take?

b) In a circuit, 5megaamps of current flows when 720 Coulombs of charge are transferred. How many seconds did this take?

c) Voltage is defined as the change in energy per charge. If 1.5 coulombs of charge flow when 5mV of potential difference is applied, how much energy transfers?

d) Power is the flow of energy with time. Calculate the power if 50,0000Joules flow in an hour?

e) How much energy is transferred if you watch a television of 50W for three and a half hours?

T2 Assessment B

When 5 milliamps of current flows 100 Coulombs of charge is transferred. Calculate how many minutes it took for this current to flow.

T2 Objective C: Be able to use equation substitutions to derive the remaining circuit equations

However, what do you need an equation containing voltage current and time?
The equations can be combined to get a new equation!
Starting with

$$V = \frac{E}{Q}$$

You also know that

$$Q = It$$

You can therefore swap the symbol Q for the symbols It in any other equation
This leads to

$$V = \frac{E}{It}$$

T2 Practice C:

a) Combining the following equations, get a new equation to solve for power.

W=Fd and W=Pt

b) Combine the following equations to get a new equation for weight

Density =mass / volume and Weight = mass x gravity

c) Power is defined as the rate of flow of energy. Write this is symbol form.

d) Write the equations for current and voltage.

e) By combining equations get a new equation for IV=

f) Derive an equation for power in terms of current and voltage.

T2 Assessment C:

Using the definitions of Current, potential difference and Power, you can derive an expression for Power in terms of current and potential difference. Which equation describes this relationship (including the correct units)?

A) Power (W) = Current (A) x Resistance (Ω)
B) Power (W) = Potential Difference (V) x Current (J)
C) Power (W) = Potential difference (V) / Current (J)
D) Power (W) =Current (A) x Potential Difference (V)
E) Power (W) = Current^2 (A^2) x Potential difference (V)

Tutorial 3 – Predicting and verifying practical results from ohms law and resistance calculations.

What is the Purpose of Tutorial 3?

Students are often challenged by predicting what will happen in theoretical experiments. We will investigate a number of possibilities, and use logic to determine the expected behaviour.
Students will practice breaking down questions and interpreting data to aid in the analysis of practical based questions

T3 Objective A: Ohms Law

Ohms law states that the current through a conductor is directly proportional to the potential difference applied to it, and therefore that if there is a resistance to this current that it is a constant resistance R. Therefore:

$$Voltage\ (Volts) = Current\ (Amps) x\ Resistance (Ohms)$$

$$V\ (V) = I(A) x\ R\ (\Omega)$$

For any component we can therefore calculate the resistance using ohms law if we know the current and voltage through that component.
Using the techniques of last tutorial we can also rearrange this equation to solve for current or voltage if given the other resistance and the other variable.

T3 Practice A

a) Calculate R when I=30A and V=10V

b) What is the resistance of a resistor if 5A current flows when 20V of voltage are applied?

c) Calculate voltage when I=3A and R=0.5Ω

d) A resistor marked 50 Ω is attached to a battery of 6 Volts, how much current flows?

e) How would you test the resistance of a resistor of unknown resistance?

T3 Assessment A

Which of the following are false

a) Ohms law applies to all components
b) Current = voltage x resistance
c) You can calculate the resistance of a wire if you know the voltage and current going through it.
d) The unit of resistance is the amp
e) If R=10 and V=5, A must equal 0.5.

T3 Objective B: Experiments with Ohmic conductors

An Ohmic conductor can also be defined as a conductor for which the resistance is always the same. This is true of wires and resistors, but not all components.

You have done an experiment to test that a wire does behave as an Ohmic conductor.

T3 Practice B:

You set up a circuit to test the resistance of a wire of 10cm length.

a) How could you check that ohms law applies to this wire?

b) Draw the graph you would expect to see of current vs. voltage assuming you did not change the length of the wire.

c) What would happen to the resistance of the system if you increased the length of the wire?

d) You now repeat the experiment keeping voltage constant. Draw a graph of resistance vs. wire length, do you expect to find data that fits a certain shape?

e) Another student repeats this experiment with a thicker wire, draw the graph of the data they measure.

T3 Assessment B:

A student performed an experiment to measure the resistance of a wire as the length of the wire was changed. Their data is shown below.

P.D (Volts)	0.00	0.50	1.00	1.50	2.00	2.50	4.00	5.00
Current (Amps)	0.00	0.10	0.14	0.17	0.18	0.17	0.20	0.17

Why this data does not represent a wire. Suggest a reason why this data might be poor.

T3 Objective C: Predicting experimental outcomes and changing experiments.

In examinations students are often asked to suggest improvements to methods. Some of these are to improve accuracy and others to improve safety. Many of these factors are always the same.

For example: hot components do not have the same resistance as cold components.

T3 Practice C:

a) A student performs an experiment to measure the resistance of a resistor. She measures current and voltage ten times and then calculates the resistance. She records that the resistance changes through the experiment and that resistor is hot when she finishes. Explain what has happened in this experiment and suggest a way to improve this experiment.

b) During a wire testing experiment, the equipment is used continuously for 30minutes without ever being turned off. The scientist doing the test then disconnects the wire by hand to stop the current. Will the wire act as an Ohmic conductor, explain why?

c) After the experiment completed in part b) the scientist is told that this was unsafe, name two unsafe things about this experiment and what the scientist should have done instead.

d) A student measures the current through a resistor at five different voltages taking one measurement per voltage and then calculates the resistance at each point. She finds that the

resistance is not the same at each voltage. What could she do to increase the accuracy of her result?

T3 Assessment C:

(a) **Figure 1** shows the current–potential difference graph for three wires, **A**, **B** and **C**.

Figure 1

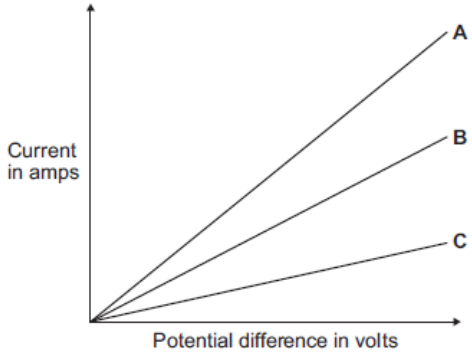

(i) Using **Figure 1**, how can you tell that the temperature of each wire is constant?

Tutorial 4 – Circuit laws and diagrams

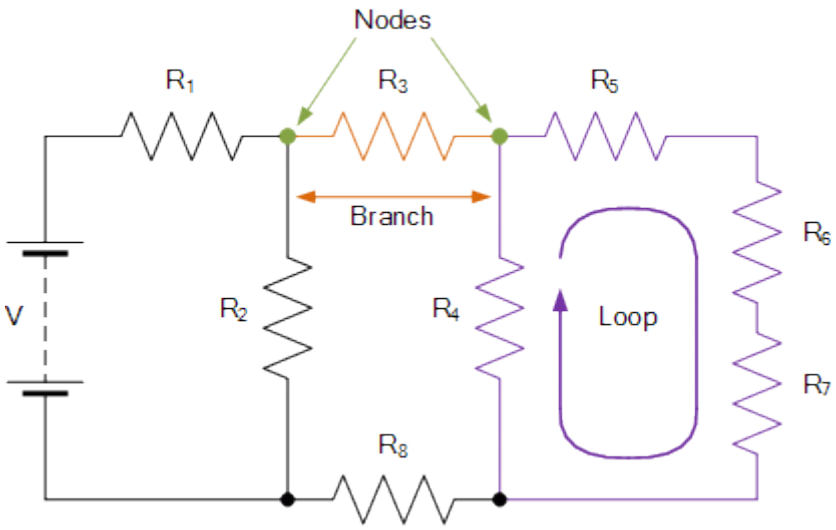

What is the Purpose of Tutorial 4?

Whilst simple circuit diagrams and components are comfortable to students, questions often arise which require an interpretation of complex circuit diagrams, or a discussion of where current will flow in a diagram.
In this tutorial we will discuss how to break down and analyse these circuits to make sure that the correct flows are identified and that accurate calculations can be made around components.

T4 Objective A: Analysing Series Circuits

A series circuit is a circuit in which **all of the components are connected in a chain**; there are no junctions. The current in a series circuit can only take one path; this means that the current is the same everywhere in a series circuit.
However because every component has some resistance, the potential difference over each one varies. What we see is that the voltage is shared.

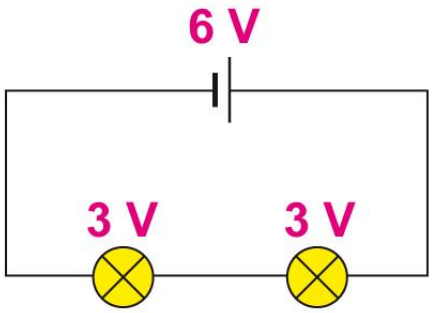

T4 Practice A:

a) Explain why the current through a series circuit must be the same everywhere. You must mention conservation of mass.

b) A circuit contains three identical bulbs and is powered by a 6V battery. Draw this circuit and calculate the potential difference exists over each bulb?

c) In the circuit for part b) if 2A of current passes through the first bulb, how much must pass through the second bulb?

d) Draw a circuit containing two resistors in series with a power supply. The first resistor is marked as a 10Ohm resistor and the second is a 2 Ohm resistor. The power supply delivers 3Amps of power, what voltage exists over each resistor?

T4 Assessment A

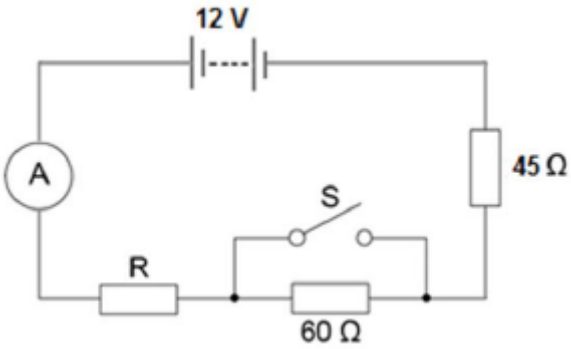

(a) The ammeter displays a reading of 0.10 A.

Calculate the potential difference across the 45 Ω resistor.

T4 Objective B: Analysing Parallel circuits

Parallel circuits have multiple paths, or branches that current can flow through.
In parallel circuits the current travelling has multiple paths it can follow, so the current in each branch of the circuit can be different.
The voltage, across each branch is the same. This is because each branch is connected directly to the battery and so receives the same potential difference.

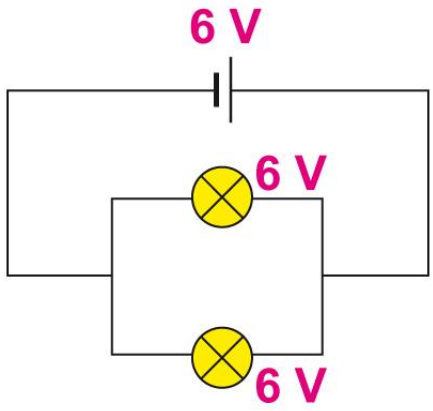

T4 Practice B

a) Explain why the voltage across components placed in parallel must be the same. You must mention how potential difference is applied by the battery.

b) A circuit contains two identical bulbs in parallel and is powered by a 6V battery. Draw this circuit and calculate the potential difference that exists over each bulb.

c) In the circuit for part b) if the resistance of the bulbs is 5Ohms what current passes through each bulb?

d) Explain why the current through each bulb was the same, and calculate how much total current left the battery.

e) Draw a circuit containing two resistors in parallel with a power supply. The first resistor is marked as a 10Ohm resistor and the second is a 2 Ohm resistor. The power supply delivers 12V potential difference, what current goes through each resistor?

T4 Assessment B:

Which of the following statements are true?

a) In a parallel circuit, Voltage is the same across every component
b) Ohms law can be used to calculate the resistance of any component
c) Current is conserved
d) Current through identical components in a parallel circuit is identical.

T4 Objective C: Analysing complex circuits

Some circuits are complex and contain both series and parallel sections. In order to analyse these you must first break them down into sections. Sections which only contain components in series will follow series circuit laws and sections which only contain components in parallel will follow parallel circuit laws.

T4 Practice C:

Figure 1 is a complex circuit. We will break this down into sections to work out the current and voltage in each section.

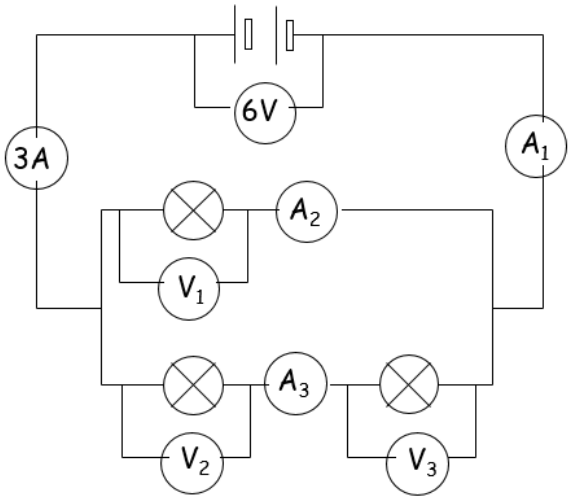

Figure 1: A complex circuit.

a) You want to represent this circuit as a series circuit. Redraw part of the circuit as one large box, so that all remaining parts are in series. Write in the table below any values you can determine from this series circuit.

b) Draw what was inside the large box as its own circuit. Is this still a complex circuit? Can you calculate any more values?

c) Repeat this to calculate the remaining values, write them in the table.

A1	
A2	
A3	
V1	
V2	
V3	

T4 Assessment C:

Figure 2 is a complex circuit, calculate the values for the remaining currents and potential differences, write your answers in the table below.

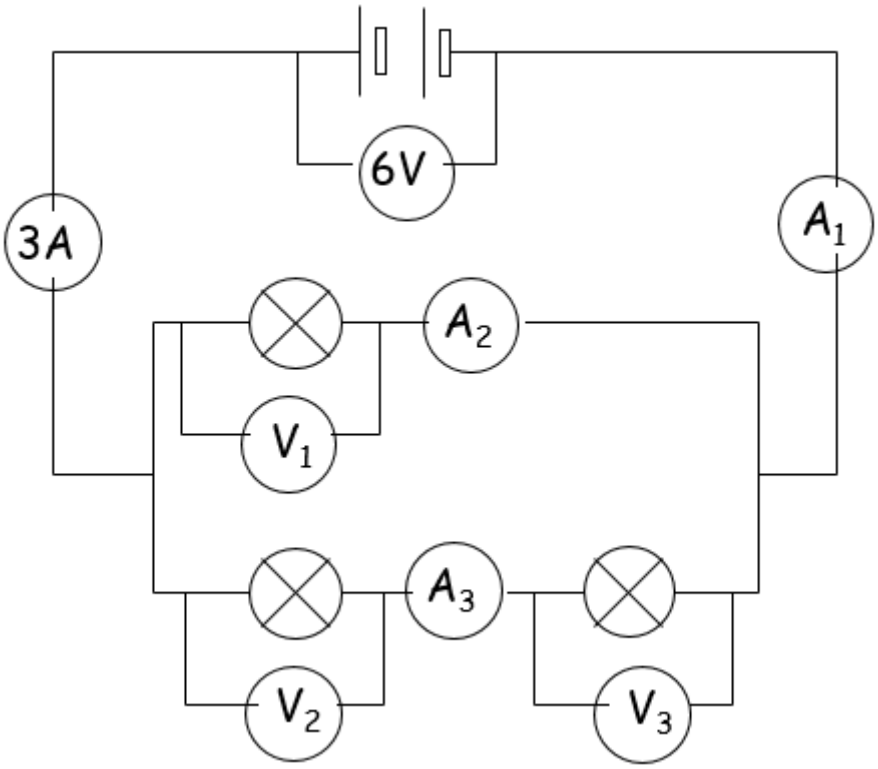

Figure 2 a complex circuit.

A1	
A2	
A3	
V1	
V2	
V3	

Tutorial 5 – Non-Ohmic components

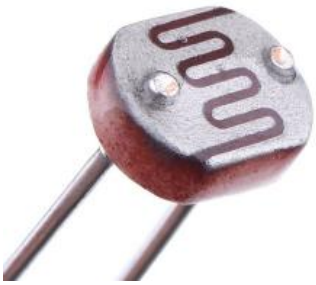

What is the Purpose of Tutorial 5?

Many components do not act as Ohmic resistors. Careful analysis of questions is necessary in order to determine what behaviour is to be expected.

Components such as thermistors, light dependant resistors and diodes will be considered and analysed so that students can reason out the requirements of exam questions.

T5 Objective A – Understanding filament bulbs and diodes

The two most commonly used non-Ohmic conductors are the filament bulb and the diode.

Filament bulbs get hot as power flows through them, and because of this their resistance increases. If you draw a graph of current vs. resistance for a filament bulb it will not be a straight line. The graph of IV for a bulb is shown below.

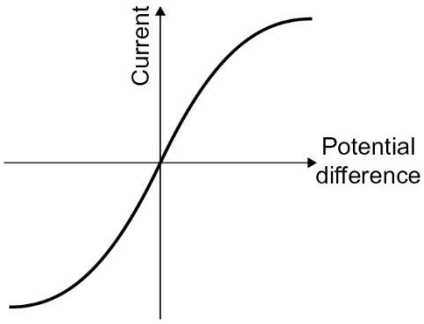

Fig 1: IV graph for a filament bulb.

T5 Practice A

1) A student measures the current and voltage flowing through a filament bulb as different voltages and collects the data below.

P.D (Volts)	Current (Amps)	Resistance (Ohms)
0		
0.5	0.10	
1.0	0.20	
1.5	0.30	
2.0	0.36	
2.5	0.42	
4.0	0.44	
5.0	0.45	

What is the current at a potential difference of 0?

Plot the current vs. voltage of the bulb on graph paper and calculate the resistance at each point.

2) Diodes have almost zero resistance when potential difference is applied in one direction (when P.D is negative) but their resistance increases rapidly as P.D increases in the positive direction.

Plot the current to voltage graph for a diode.

T5 Assessment A

Bulbs are described as non-Ohmic conductors.

a) Explain what is meant by a non-Ohmic conductor

b) Describe how you could test if the bulb was an Ohmic or non-Ohmic conductor.

T5 Objective B - Understanding LDRs and Thermistors.

Thermistors and Light dependant resistors can be used to change the resistance in a circuit in response to a change in the environment. They behave as follows.

Thermistors: Resistance decreases as temperature is increased.
Light dependent resistors (LDRs): Resistance is decreased as light intensity is increased

Worked example
This diagram shows a circuit from inside an appliance

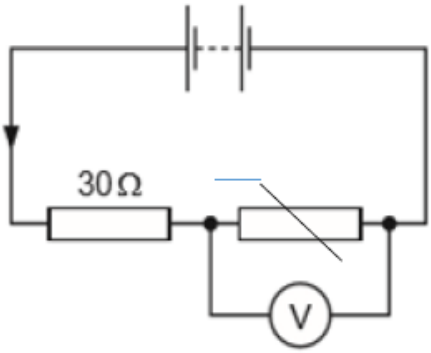

a)Name component A

Component A is a thermistor

a)Sketch a graph to show how resistance of component A changes as temperature is increased.

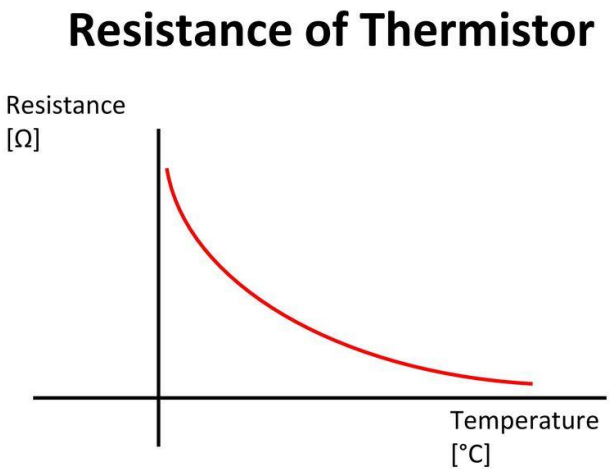

b) Suggest a practical application for this circuit

This circuit could be used in any device which needs to monitor temperature. For example, the thermostat for an electric central heating system

T5 Practice B

Light dependant resistors (LDR) work in a similar way to thermistors.

a) Draw the symbol for a LDR

b) What will happen to the resistance of a LDR if a light is shined on it?

c) Draw a graph of resistance vs. temperature for a LDR. What shape should the relationship be?

d) Suggest a practical application for a circuit containing an LDR.

T5 Assessment B

The diagram shows part of a circuit used to switch street lamps on and off automatically. In the evening it gets dark. Which row shows the effect on the resistance of the Light-Dependent resistor (LDR), and on the P.D. across it?

v	Resistance of LDR	P.D. across LDR
A	Decreases	Decreases
B	Decreases	increases
C	Increases	Decreases
D	increases	increases

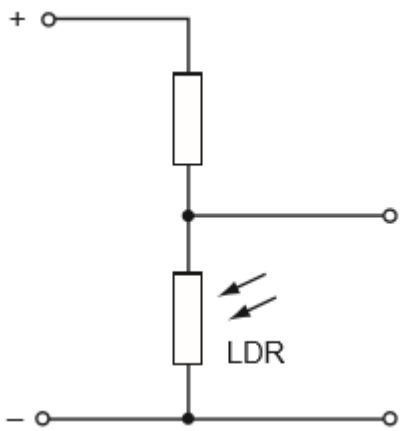

T5 Objective C – Creating useful circuits with non-Ohmic conductors.

Many different devices can be made using simple electrical components. With the knowledge you have gained from how various components work, we will now investigate some of these applications.

T5 Practice C:

1)A digital thermometers used by paramedics works by measuring changing P.D. a) What components are required to build a circuit for this thermometer b) Draw a circuit that could be used for this application

2) An LED backlit phone screen is designed to increase in brightness as the external light intensity decreases. a) What components are required to build this circuit? b) Draw a circuit that could be used for this application.

3)Jo has been asked to design a circuit to control the temperature in an incubator. The circuit needs to turn a heater on if the temperature inside gets too low.

The symbol to use for a heater is:

Draw a circuit that could be used for this application

4)a) Draw a circuit diagram that could be used to find out how the current through a fixed resistor varies with applied potential difference (between 0and 12 V).

b)Describe the readings you need to take.

T5 Assessment C:

What is the function of this circuit?

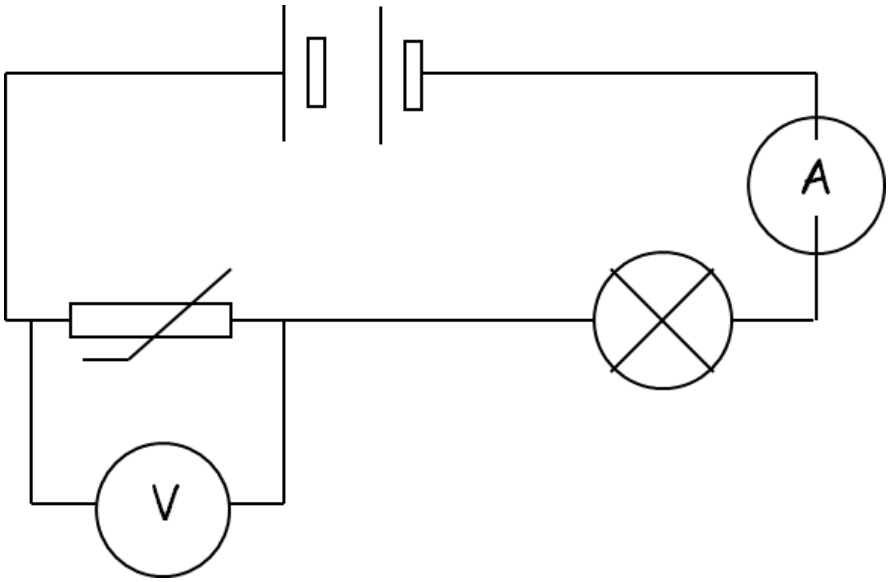

A	To turn on a light only when it gets dark.
B	To adjust the brightness of a light.
C	To brighten a bulb when the circuit gets hot.
D	To turn off a light when a certain temperature is reached.

Tutorial 6 – Final Assessment

What is the Purpose of Tutorial 6?

On order to see if these tutorials have helped in increasing understanding, this assessment will cover exam questions from the electrical circuits unit. This assessment is very similar to the one at the start of the unit, so by comparing the performance in these assessments students will see exactly how much progress they have made.

- Final assessment

Tutorial 7 - Feedback

What is the Purpose of Tutorial 7?

- To receive feedback on final assessments.
- To share examples of best practice with the other pupils in your group.
- To write targets for improvement in school lessons.
- To reflect on the programme including what was enjoyed and what was challenging.

Final assessment feedback

What I did well…	What I could have improved on…
•	•
•	•
•	•

My target for future work is…

Reflecting on Uni Pathways

What did you most enjoy about Uni Pathways?
•   •   •

What did you find challenging about the programme?	How did you overcome these challenges?
• • •	• • •

Notes

Notes

Notes

Electrical Circuits

Key Stage 4 Programme

researchersinschools.org