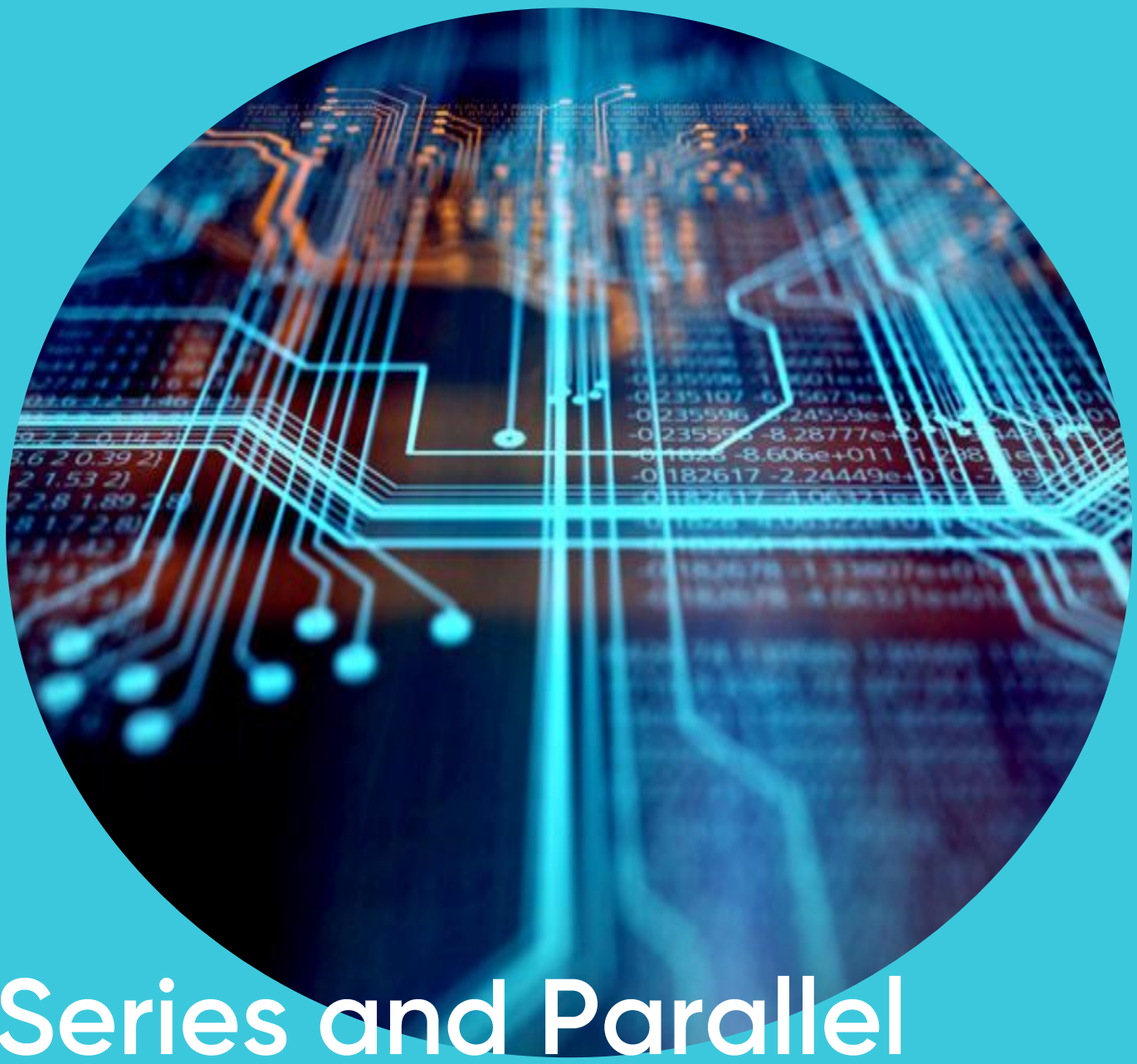

Series and Parallel Circuits

Key Stage 4 Revision Programme

Pupil Name	
Handbook Designed by	S Carnell

Timetable and Assignment Submission

Timetable – Tutorials

Tutorial	Date	Time	Location
1 (Baseline)			
2			
3			
4			
5			
6 (Final Assignment)			
7 (Feedback)			

Timetable – Homework Assignments

Tutorial 1		
Tutorial 2		
Tutorial 3		
Tutorial 4		
Tutorial 5		

Contents

Course Rationale **P4**

Glossary of Keywords **P5**

Tutorial 1 Baseline Assessment and Pre-SEF **P6**

Tutorial 2 Circuit components and diagrams **P7**

Activity 1 Recognise circuit components and know what they are used for **P7**

Activity 2 Correctly draw series circuit diagrams from both written instructions and real-life circuit images **P9**

Activity 3 Identify that circuits can be the 'same' but look different in diagrams. **P12**

Tutorial 3 Electrical Quantities, Units and V=IR **P14**

Activity 1 Recall the units and symbols of electrical quantities **P14**

Activity 2 Use E=QV, Q=It and V=IR to calculate electrical quantities **P15**

Activity 3 Combine the above equations to calculate electrical quantities **P21**

Tutorial 4 Parallel circuit calculations **P22**

Activity 1 Drawing parallel circuit diagrams **P22**

Activity 2 Understand why ammeters and voltmeters are placed within circuits **P24**

Activity 3 Calculate electrical quantities in parallel circuits **P25**

Tutorial 5 Combining Series and Parallel circuits **P27**

Activity 1 Drawing combined series and parallel circuits **P27**

Activity 2 Calculating electrical quantities in combined circuits **P30**

Activity 3 Exam techniques **P34**

Tutorial 6 Final Assessment and Post-SEF

P35

Reflection on feedback **P35**

Course Rationale

This course will cover each aspect of the Physics AQA specification point Series and Parallel circuits 4.2.2. Electrical circuits have been highlighted as an area of physics that can cause some confusion amongst pupils. The course will focus on how circuits can be drawn, and how electrical quantities behave in each type of circuit. Each tutorial will further focus on a specific part of circuits. The tutorials aim to present information and model examples of how to apply the information. There will then be many opportunities to practice the skills demonstrated during the tutorial and opportunity to show understanding at the end.

The opportunity to practice exam style questions that may be approached or worded in unusual ways will allow for the calculations skills to be transferred from your working memory. This means that you will carry out certain calculations or questions almost automatically and give you more working memory space to apply to more difficult questions. Research has shown that the more practice you have within an area the more able you are to apply that knowledge in higher level questions.

Prior to the course you will undertake a baseline test, this is to inform how much knowledge you already have in this area. You will then go through each tutorial in order and at the end complete a final test to compare your progress.

Subject Vocabulary

Word	Definition	In a sentence
Circuit		
Potential difference		
Current		
Resistance		
Parallel		

Tutorial 1 – Baseline Assessment and Pre-SEF

What is the Purpose of Tutorial 1?

- Complete the required data entry for the course
- Provide information about current understanding in the topic
- Have exposure to a range of exam questions in this area

Tutorial 2 – Circuit components and diagrams

Starter

There are 2 components shown below. What do we use them for?

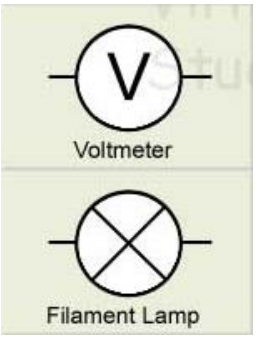

What is the Purpose of Tutorial 2?

- Recognise circuit components and know what they are used for
- Correctly draw series circuit diagrams from both written instructions and real-life circuit images
- Identify that circuits can be the 'same' but look different in diagrams.

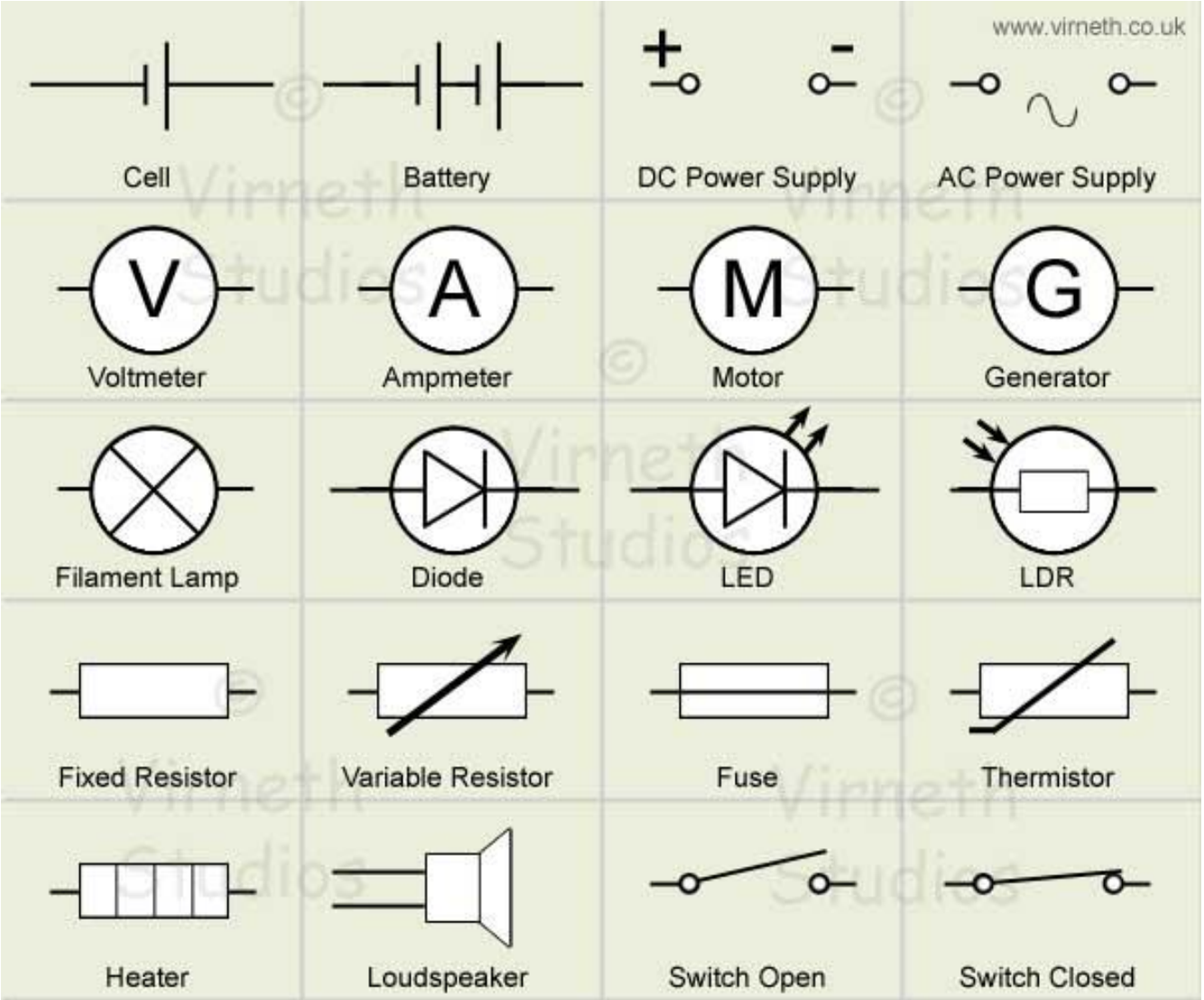

Device	Use/Description
Cell	
Battery	
DC Power supply	
AC Power Supply	
Voltmeter	
Ammeter	
Motor	
Generator	
Filament Lamp	
Diode	
LED	
LDR	
Fixed resister	
Variable resister	
Fuse	
Thermister	
Heater	
Loudspeaker	
Switch open	
Switch closed	

Where is an LDR used?	
☐	In a fire alarm
☐	To increase the efficiency of fairy lights
☐	Automatic security lights
☐	To detect potential difference over a device

Where is a voltmeter used?	
☐	In a fire alarm
☐	To increase the efficiency of fairy lights
☐	Automatic security lights
☐	To detect potential difference over a device

Drawing Circuits

The connections in circuit diagrams are drawn with square corners and straight lines. Circuits have to be closed and include a power supply. The diagrams below show 2 series circuits with a selection of electrical components

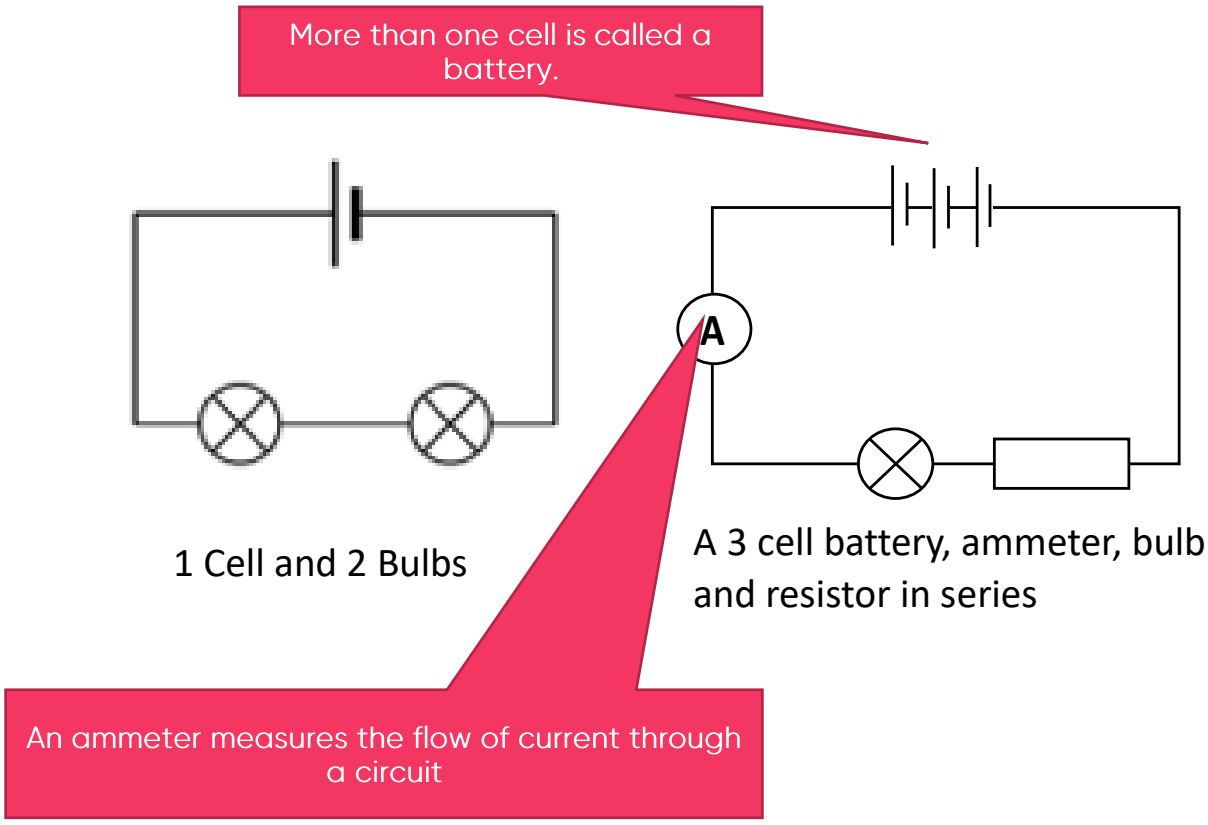

Practice drawing circuits

A cell, ammeter and bulb in series	A cell, ammeter and 2 bulbs in series
A 2 cell battery, bulb and motor in series	A 3 cell battery, ammeter, bulb and resistor in series
A cell, ammeter, switch and 2 bulbs in series	A 3 cell battery, ammeter, bulb and variable resistor in series

Draw 4 Circuits of your own choice and write down what devices are included in the circuit. (minimum 3 devices, max 6)

Assessment Circuit diagrams

Which diagram correctly shows a fixed resistor, a filament bulb and a 2 cell battery?

☐	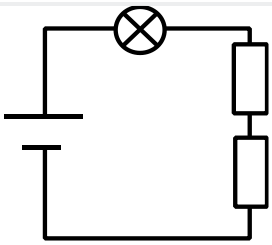	☐	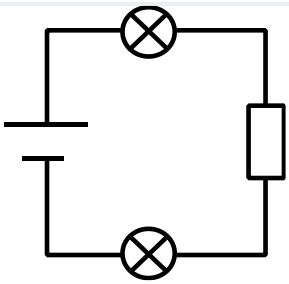
☐	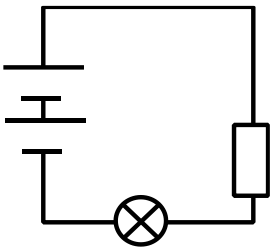	☐	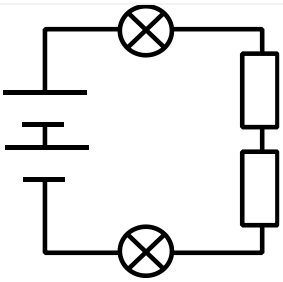

Similar circuits

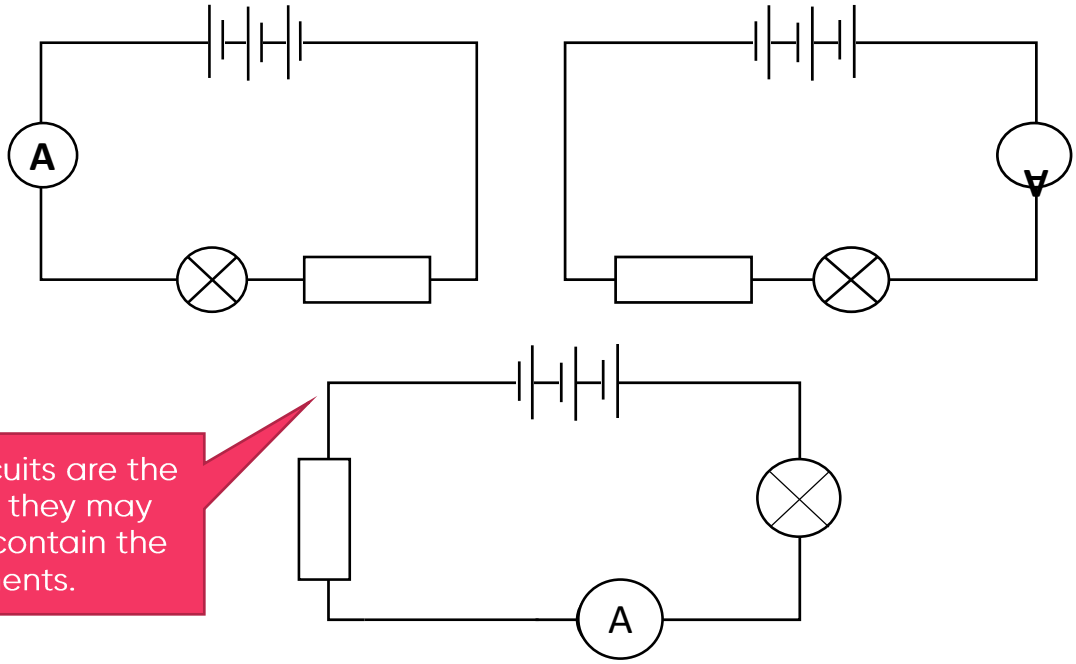

All three of these circuits are the same. Even though they may look different, they contain the same components.

Practice drawing similar circuits

Draw the circuit to include all the components stated in the box, then draw an alternate circuit in the empty box.

A cell, ammeter and bulb in series	
A 2 cell battery, bulb and motor in series	

A cell, ammeter, switch and 2 bulbs in series	

Assessment
Which of the circuits are the same?

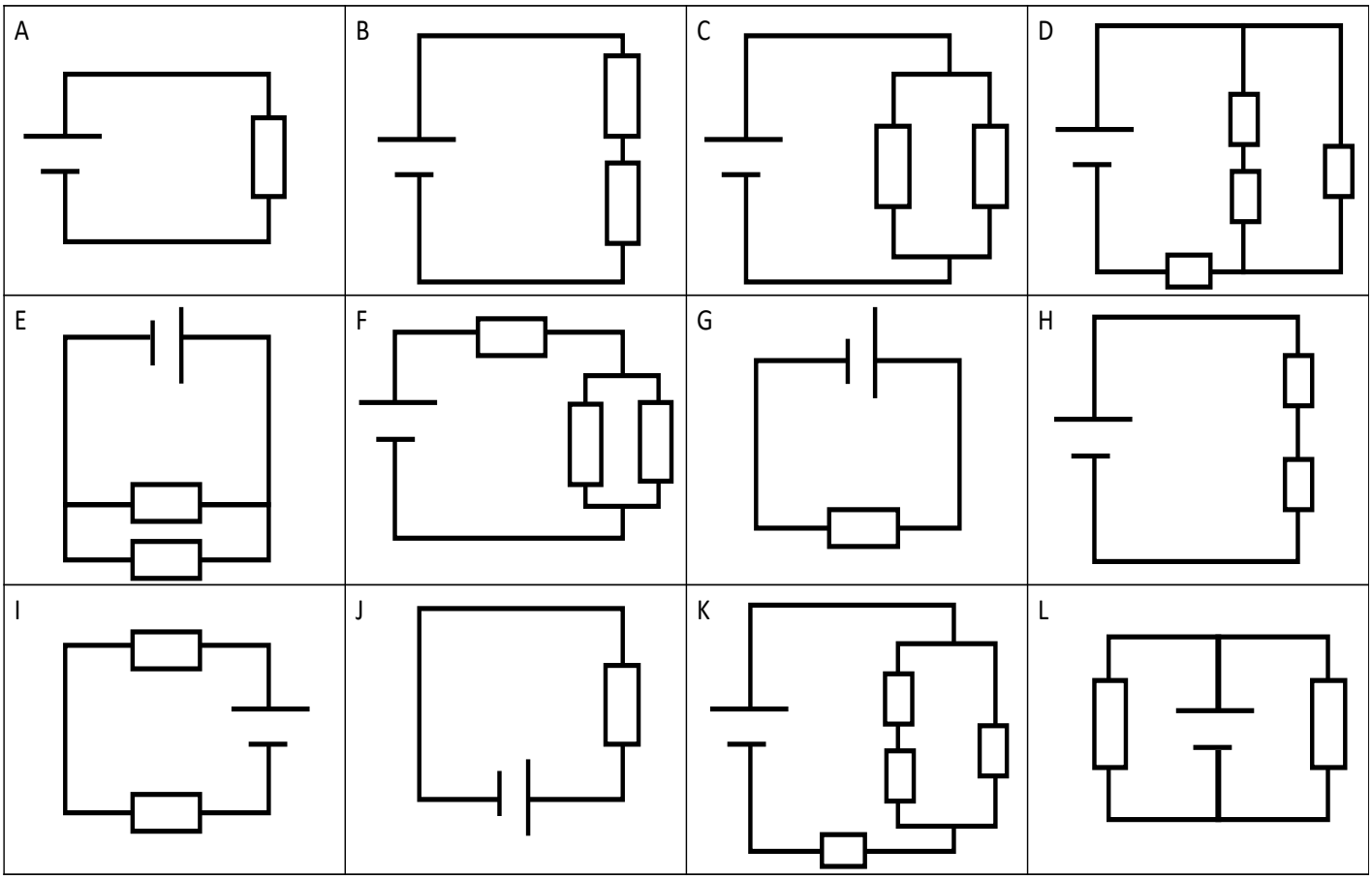

Plenary

Draw a circuit that could be used to inside of a torch. Give an explanation for each component.

Tutorial 3 – Electrical Quantities, Units and V=IR

Starter
What things can influence resistance?

What is the Purpose of Tutorial 3?

- Recall the units and symbols of electrical quantities
- Use E=QV, Q=It and V=IR to calculate electrical quantities
- Combine the above equations to calculate electrical quantities

Knowing the units for each quantity can help you work out which equations are to be used

Potential Difference V Volts, V	Current I Amperes, A	Resistance Ω Ohms, Ω	Charge Q Coulombs, C	Energy E Joules J	Time t Seconds s	Power P Watts, W

Name
Symbol
Units
Unit

Practice recalling units and symbols
Use this space to write out/ mind map/ poster/ draw the information above to help you remember the units and symbols of each quantity.

What are the unit and symbol for Energy?
What does Q stand for and what is the unit?
What is time measured in?

Assessment recalling units and symbols

Which of these are the correct unit and symbol for current?	
☐	Amps, C
☐	Volts, C
☐	Amps, I
☐	Volts, I

Calculating electrical quantities – Example 1

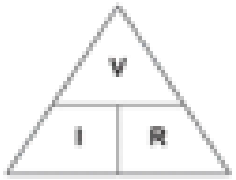

A resistor allows a current of 0.020A to flow through it when there is a potential difference (p.d) of 10.0V between it's ends. What is the resistance?

Step 1: Write down everything that you know from information given in the question. It may also be useful to draw out the section of the circuit (see below).

- Current I =0.020A
- P.d V = 10.0V
- Resistance R=? We need to calculate this.

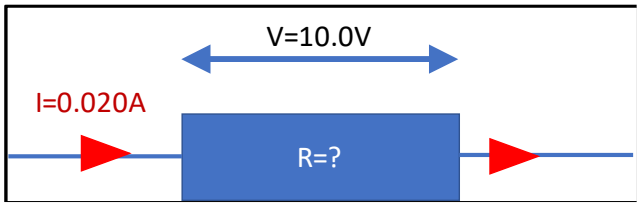

Step 2: Write down the equation you need.

Using the triangle above, cover the quantity that you need to find out and the equation you need is revealed (see right).

$$R = \frac{V}{I} = \frac{10.0V}{0.020A} = 500\Omega$$

The resistance of the resistor is 500Ω

We need to find the resistance.
Cover R and we are left with] _
So, $= \frac{V}{I}$

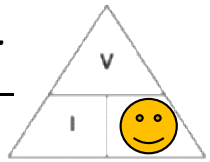

Calculating electrical quantities – Example 2

What is the P.d for each cell of the circuit?

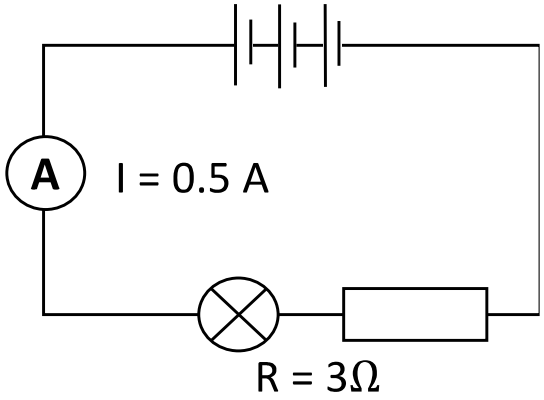

Step 1: Write down everything that you know from information given in the question.
Current I = 0.5 A
Resistance R = 3Ω
P.d V = ?

Step 2: Write down the equation you need.

V= I x R = 0.5 A x 3Ω = 1.5 V

The total p.d of the circuit is 1.5 V.

There are 3 cells included in the circuit. $\frac{1.5}{3} = 0.5V$

Each cell has a potential difference of 0.5 Volts.

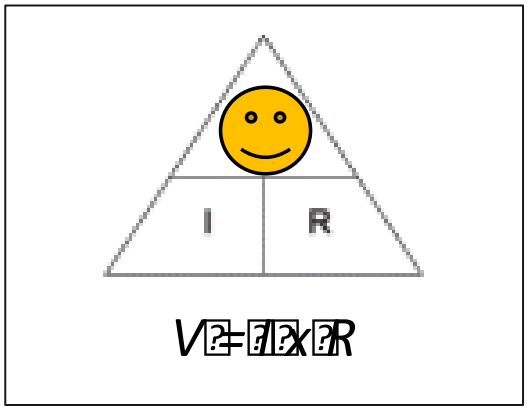

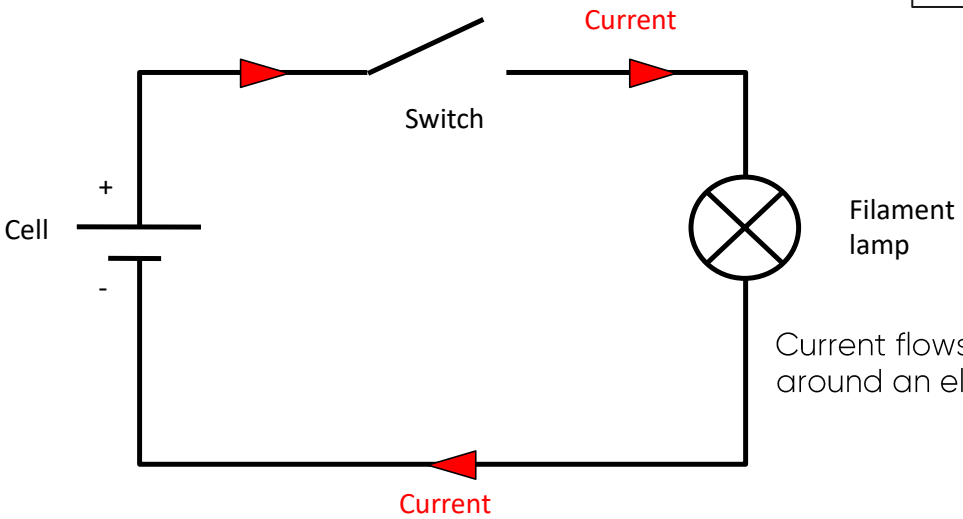

Current flows from positive to negative around an electrical circuit

Practice using V=IR

1. Calculate the voltage in the following circuits:
   a. Current = 2A, resistance = 10 Ohms
   b. Current = 5A, resistance = 2 Ohms
   c. Current = 100A, resistance = 2.3 Ohms

2. Calculate the current in the following circuits:
   a. Voltage = 10V, resistance = 2 Ohms

b. Voltage = 120V, resistance = 40 Ohms

c. Voltage = 230V, resistance = 5 Ohms

3. Calculate the resistance in the following circuits:

   a. Voltage = 230V, current = 10A

   b. Voltage = 12V, current = 1.5A

   c. Voltage = 60V, current = 2A

4. Des uses the following circuit to find the resistance of a lamp:

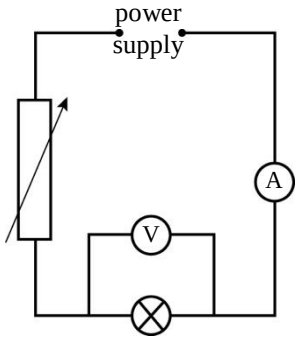

Brightness of bulb	Current	Voltage	Resistance
bright	3A	12V	
dim	2A	6V	

(a) Complete the table of results to find the two missing resistances.

(b) How does the resistance change with the brightness of the lamp?

Assessment using V=IR

If the restance within a circuit is 0.7 Ohms and the potential difference from the battery is 12v. what is the current flowing?

☐	8.4A
☐	8.4Ω
☐	17.1 A
☐	17.1Ω

Calculating electrical quantities – Example 3

What is the Energy transferred within a circuit?

How much energy is transferred when the potential difference (V) is 120 V and the charge (Q) is 2 C?

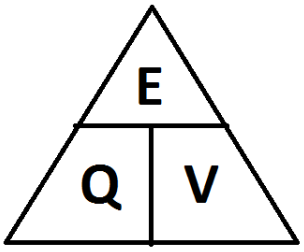

Step 1: Write down everything that you know from information given in the question.

- Potential difference (V) = 120Volts
- Charge (Q) = 2 Coulombs
- Energy in joules = ?

Step 2: Write down the equation you need.

Using the triangle above, cover the quantity that you need to find out and the equation you need is revealed.

$$E = Q\ x\ V = 2C\ x\ 120V = 240J$$

Energy transferred = 120 × 2 = 240 J

Calculating electrical quantities – Example 4

What is the Energy transferred within a circuit?

What potential difference is needed in order to transfer 700Joules of energy and a charge of 14 Coulombs?

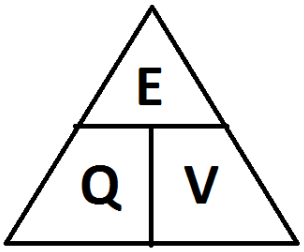

Step 1: Write down everything that you know from information given in the question.

- Charge (Q) = 14 Coulombs
- Energy in Joules = 700 Joules
- Potential difference (V) = ?

Step 2: Write down the equation you need.

Using the triangle above, cover the quantity that you need to find out and the equation you need is revealed.

$$V = \frac{E}{Q} = \frac{700}{14} = 50V$$

Potential difference required = 50Volts

Practice using E=QV

1. How much energy is transferred when 10C flows through a lamp with 230V applied across it.
2. What is the charge when 20J of energy is transferred through a lamp with 230V applied across it
3. What is the charge when 100J of energy is transferred through a lamp with 1kV applied across it
4. How much energy is transferred when 42C flows through a circuit with 230V applied across it
5. What is the charge when 7J of energy is transferred through a lamp with 2V applied across it
6. How much energy is transferred when 2.8C flows through a lamp with 6.7kV applied across it.

Assessment using E=QV

What is the energy transferred when the potential difference is 1.5V and the charge is 25C?	
☐	35.7J
☐	16.7J
☐	37.5A
☐	16.7A

Calculating electrical quantities — Example 5

What charge is transferred through a circuit?

Calculate the charge that passes through a lamp in 2 minutes if the current is 1.5 A?

To calculate the charge, you need to use the following formula:

charge = current x time

Step 1: Write down everything that you know from information given in the question.

- Time (s) = 2 mins = 2 x 60 seconds = 120 seconds
- Current (I) = 1.5 Amps
- Charge (Q) = ?

Step 2: Write down the equation you need.

Using the triangle, cover the quantity that you need to find out and the equation you need is revealed.

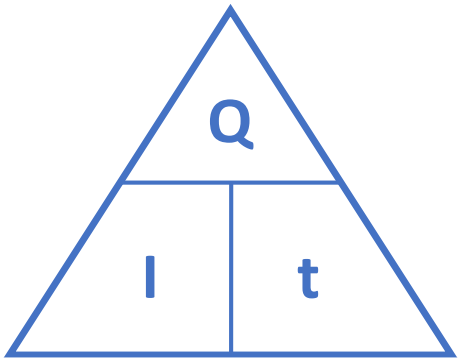

$$Q = I\ x\ t = 1.5\ x\ 120s = 180\ C$$

Charge passing = 180 Coulombs

Practice using Q=It

1. a) The current in a wire is 0.72 A. Calculate the charge that passes through the wire in:
   (i) 4 s (ii) 7 min
   b) Calculate the average current in a wire if a charge of 3500 C passes in:

   (i) 9 s (ii) 200 s

2. What is the average electric current in a wire when a charge of 150 C passes in 30 s?

3. Calculate how long it takes for the following charges to pass a point in the circuit:
   a) 6.0 C, when the current is 0.5 A
   b) 48 C, when the current is 36 mA

4. Calculate the number of electrons passing a point in a circuit when there is a current of:
   a) 4.0 A for 60 s
   b) 12 mA for 25 s

Assessment using Q=It

A certain type of rechargeable battery is capable of delivering a current of 0.2 A for 4000 s, before its voltage drops and it needs to be recharged. Calculate the total charge the battery can deliver before it needs to be recharged,	
☐	800C
☐	800V
☐	20000C
☐	20000V

Calculating electrical quantities – Example 6 combining equations.

A kettle transfers 540 000J of energy in 3 minutes with a current of 3A. What is the potential difference in the circuit?

Step one: note down the electrical quantities that you know.

E = 540 000J

T = 3 minutes = 180 seconds

I = 3 amps

What equation includes 2 of the known quantities?

$$Q = I\ x\ t = 3\ x\ 180s = 540\ C$$

So, we now know the charge (Q). What equation includes potential difference and charge?

$$V = \frac{E}{Q} = \frac{540\ 000}{540} = 1000V$$

Practice combining equations. E=QV, Q=It and V=IR

1. How much energy is transferred when 10C flows through a lamp with a potential difference of 230 over 30 seconds?

2. What is the charge when 20J of energy is transferred through a lamp with a resistance of 2 Ohms and a current of 3Amps?

3. How much energy is transferred in 5 minutes when a current of 5 Amps flows through a circuit with 230V applied across.

Assessment combining equations

A certain type of rechargeable battery is capable of delivering a current of 0.2 A for 4000 s, if the potential difference is 12V, what is the energy transferred?	
☐	9,600J
☐	1666.7J
☐	9,600V
☐	1666.7 V

Plenary

Can you combine 2 equations to find the potential difference?

Tutorial 4 –Parallel circuit calculations

Starter
What are the 3 equations from last tutorial? Include the name, symbol and unit of each quantity.

What is the Purpose of Tutorial 4?

- Drawing parallel circuit diagrams
- Calculate electrical quantities in parallel circuits
- Understand why ammeters and voltmeters are placed within circuits

Drawing Parallel circuits – Example 7

The connections in circuit diagrams are drawn with square corners and straight lines. The diagrams below show 2 parallel circuits with a selection of electrical components

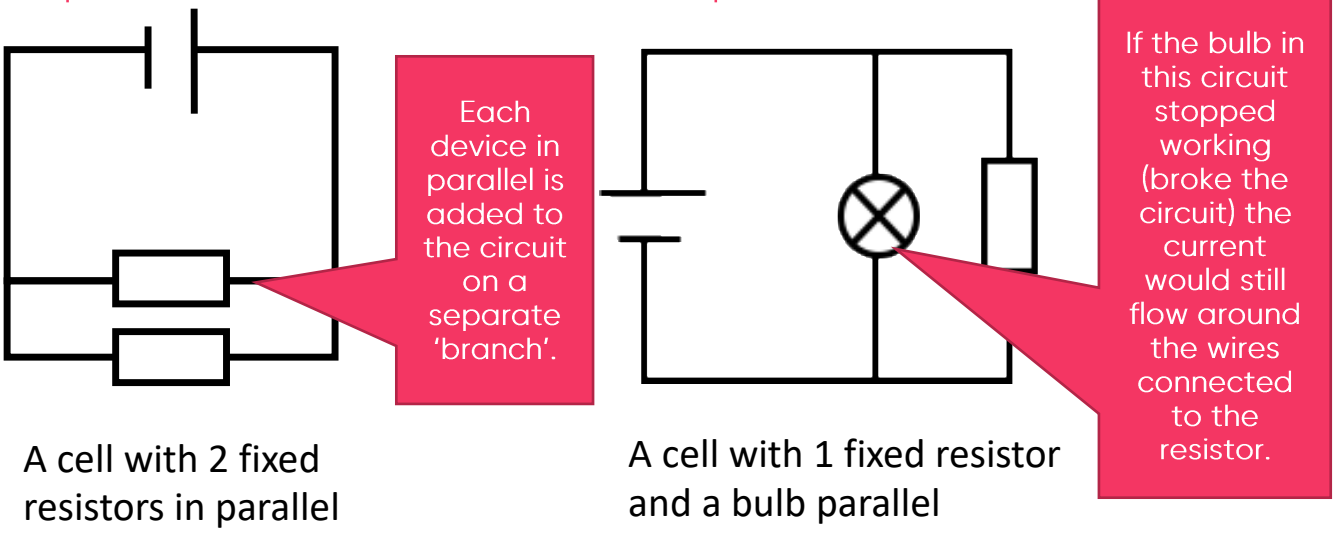

Practice Drawing parallel circuits

A cell, 2 bulbs in parallel	A cell, ammeter and 2 bulbs in parallel

A 2 cell battery in series, bulb and motor in parallel	A 3 cell battery, ammeter and bulb in series and resistor in parallel
A cell, ammeter, switch and 2 bulbs in parallel. Make sure both bulbs can be switched off using the switch.	A 3 cell battery, ammeter, bulb and variable resistor in series. The ammeter is to measure the current through the branch with the resistor.

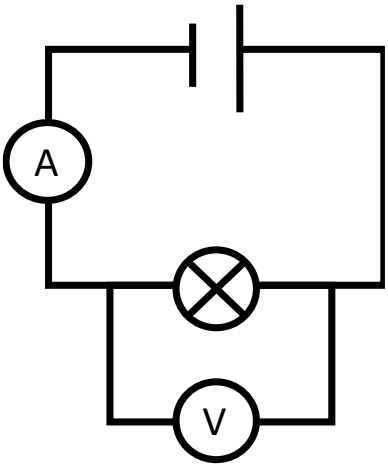

Ammeters always connect in series because they measure the current through a circuit or a device.

Voltmeters always connect in parallel because they measure a potential difference between 2 points

Assessment drawing parallel circuits

Which diagram correctly shows a fixed resistor and a filament bulb in parallel and a 2 cell battery?			
☐	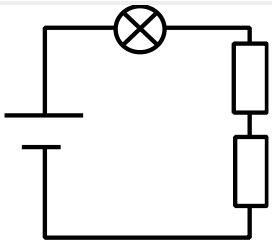	☐	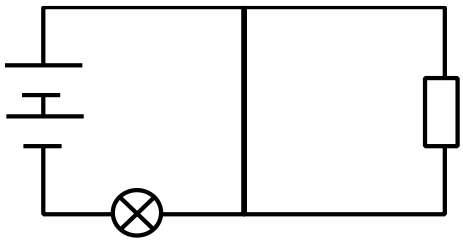
☐	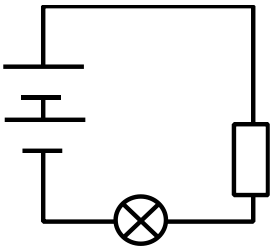	☐	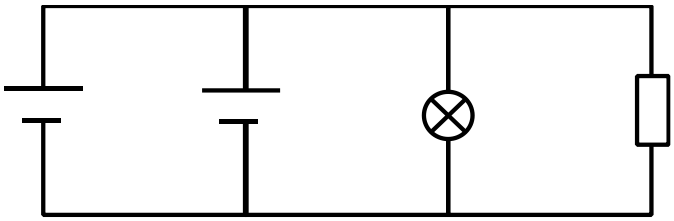

Calculating V, I and R in parallel

Parallel	P.d in each parallel branch is the same as the voltage source.	Current divides into each pathway. A pathway with less resistance will have a greater current.	The total resistance is; $1/R_T=1/R_1+1/R_2+1/R_3$..... The total resistance of the circuit is reduced when another resistor is added.

Calculating electrical quantities in parallel circuits – Example 8

What is the total current?

What is the current passing through each resistor?

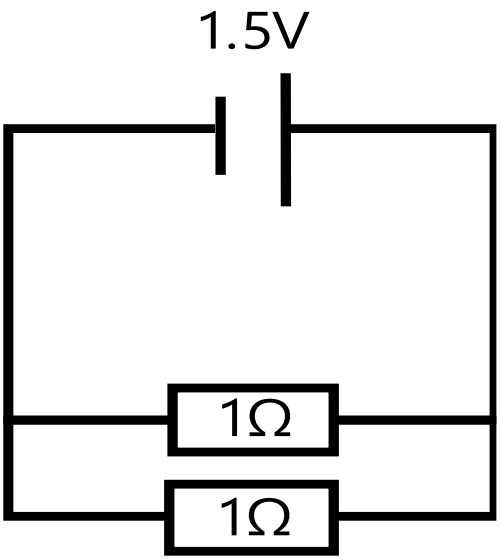

Step 1: Write down everything that you know from information given in the question.

Potential difference = 1.5 V

Total resistance in the circuit $\frac{1}{R} = \frac{1}{1} + \frac{1}{1} = \frac{2}{1}$

So total R = 0.5 Ω

Current = ?

Step 2: Write down the equation you need.

$$V = I \times R$$
$$1.5v = I \times 0.5\Omega$$
$$I = \frac{1.5v}{0.5\Omega} = 3\ Amps$$

Total current is 3 Amps

The current passing through each resistor is equally split between the 2 branches because the resistors are the same.
So,

$$\frac{3\ Amps}{2} = 1.5\ Amps$$

Practice Calculating V, I and R in parallel – Complete the table

V	R1	R2	I1	I2	I3
10	5	5			
60	2	3			
1.5	2	6			
7.5			5	2.5	
36			9	6	
60	200			0.6	
		100		0.2	0.3

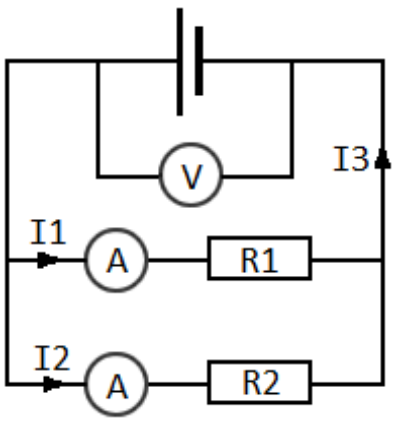

Assessment calculations in parallel circuits

What is the total resistance in a circuit if two 3 ohm resistors are placed in parallel?	
☐	6 Ω
☐	3 Ω
☐	1.5 Ω
☐	9 Ω

What is the total current in the circuit to the right?	
☐	40 A
☐	6 A
☐	3 A
☐	1.5 A

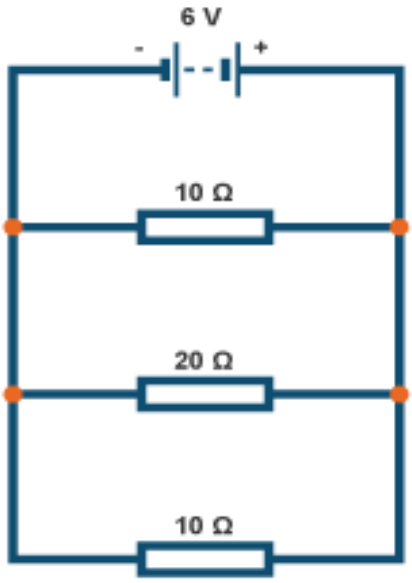

Plenary

What are the rules for resistance in series and parallel circuits?
Draw a circuit with 1 cell, a bulb and resistor. Draw where an ammeter would be placed.
Where would you place a voltmeter to measure the potential difference over the bulb?

Tutorial 5 – Combining Series and Parallel circuits

Starter

Draw a diagram of the following. A 2-cell battery, a bulb and switch in series and a bulb in parallel.

What happens to the circuit components when the switch is opened?

What is the Purpose of Tutorial 5?

- Drawing combined series and parallel circuits
- Calculating electrical quantities in combined circuits
- Exam techniques

Drawing combined circuits – Example 9

The diagrams below show 2 electrical circuits that have both series and parallel components.

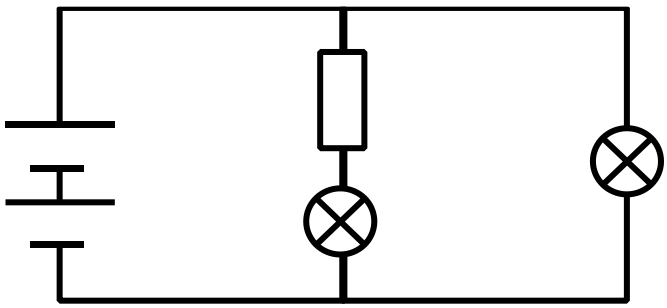

A 2 cell battery with a bulb and fixed resistor in series and a bulb in parallel.

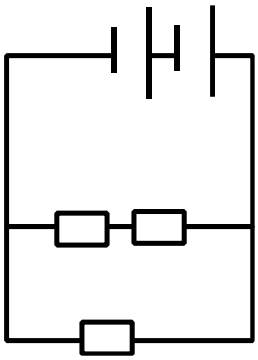

A 2 cell battery with a 2 fixed resistors in series and a fixed resistor in parallel.

Circuit	Potential Difference	Current	Resistance
Series	This is dependent on the sum of the P.d included in the circuit.	Same throughout the circuit	The total resistance is equal to the sum of all the resistors. $R_T = R_1+R_2+R_3$…..
Parallel	P.d in each parallel branch is the same as the voltage source.	Current divides into each pathway. A pathway with less resistance will have a greater current.	The total resistance is; $1/R_T=1/R_1+1/R_2+1/R_3$….. The total resistance of the circuit is reduced when another resistor is added.

Practice Drawing combed series and parallel Circuits

A cell, 2 bulbs in series and one bulb in parallel	A cell, ammeter and 2 bulbs in series and a voltmeter measuring the potential difference over the cell parallel.
A 2 cell battery in series, bulb and resister in series and motor in parallel	A 2 cell battery, ammeter and bulb in series and resistor in parallel and a voltmeter over the bulb
A cell, ammeter, switch and 2 bulbs in parallel. Make sure both bulbs can be switched off using the switch.	A 3 cell battery, ammeter, bulb and variable resistor in series. The ammeter is to measure the current through the branch with the resistor.

Assessment drawing combined circuits

Which diagram correctly shows a filament bulb and fixed resistor in series and a filament bulb in parallel and a 2 cell battery?

☐ 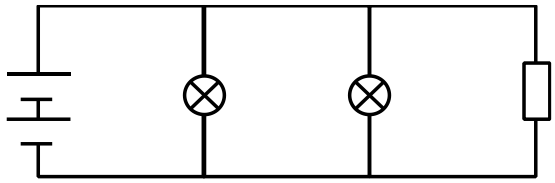

☐ 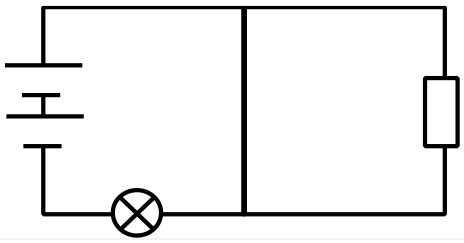

☐ 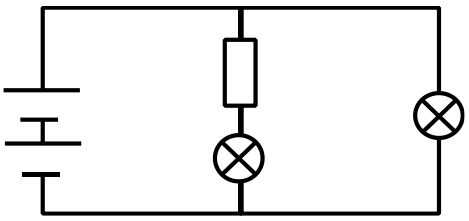

☐ 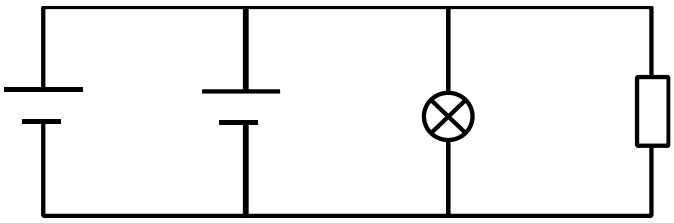

Calculating electrical quantities in combined circuits – Example 10

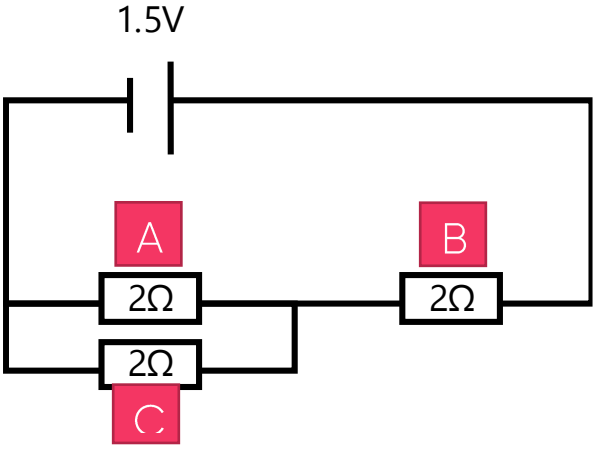

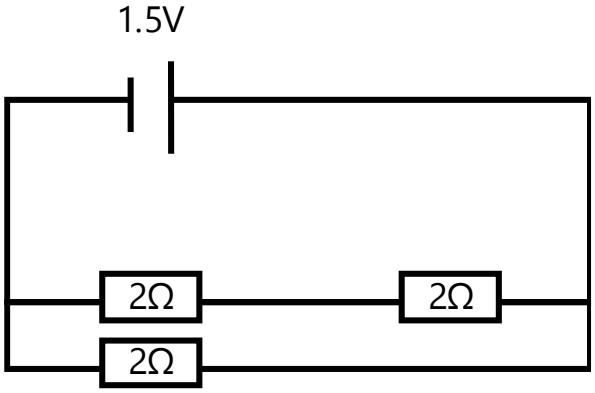

Both above diagrams are the same.

What is the total current?

What is the current passing through each resistor?

Step one: what is the total resistance of the circuit? V=IR

V=1.5V

R (for branch 1) = 2+2 =4 Ohms

R (for branch 2) = 2 Ohms

Resistance in parallel (1/R) = 1/R1 + 1/R2 = ¼ + ½ = 3/4

1/R = ¾

So,

R = R/1 = 4/3 =1.25 Ohms total resistance of the circuit.

V=IR so

I=V/R I=1.5/1.25 =1.2 Amps for total circuit.

Current passing through resistors A and B will be the same because they are in series with each other and the current is the same through a series circuit.

Current will split between the two branches, current follows the path of least resistance so more current will pass through branch 2.

Branch 1 has twice the resistance of branch 2 and will therefore have half the current of branch 2.

Total current in the circuit = 1.2 Amps.

1.2/3 = 0.4amps. (0.4 is half the amount of 0.8, 0.8 + 0.4 = 1.2 Amps).

Total current flowing through branch 1 and resistors A and B = 0.4 Amps

Current passing through resistor C (and branch 2) = 0.8 amps.

Practice Calculating electrical quantities in combined circuits.

Apply the rules of current and voltage to to following circuits and use the V=IR equation to work out the missing currents, voltages and resistances as required. Unless stated otherwise, assume all bulbs are identical. DON'T FORGET YOUR UNITS!

Remember: To work out resistors in series $R_{Total} = R1 + R2 + R3$ Resistors in parallel

$$\frac{1}{R_{Total}} = \frac{1}{R1} + \frac{1}{R2} + \frac{1}{R3}$$

1.

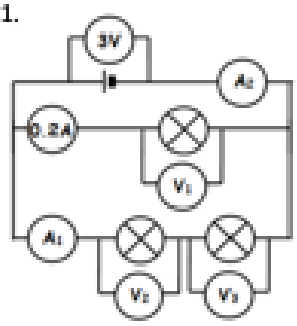

A1 = _____

A2 = _____

V1 = _____

V2 = _____

V3 = _____

2.

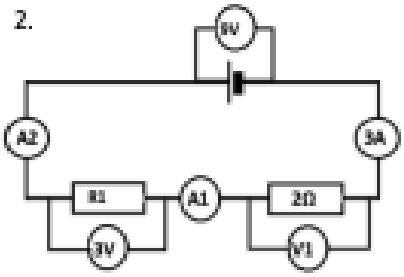

A1 = _____

A2 = _____

V1 = _____

R1 = _____

3.

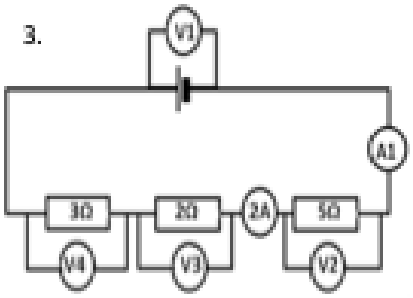

A1 = _____

V1 = _____

V2 = _____

V3 = _____

V4 = _____

4.

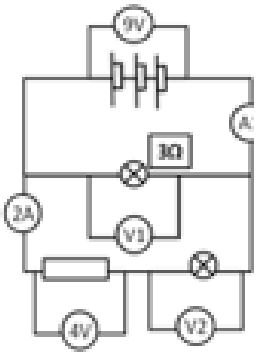

A1 = _____

V1 = _____

V2 = _____

Calculate the resistance of:

The bulb = _____

The resistor = _____

5.

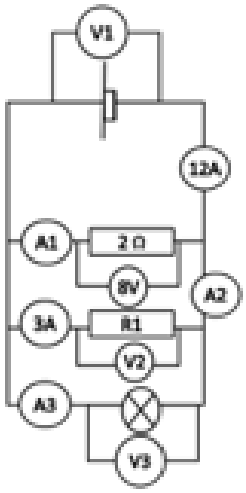

A1 = _____

A2 = _____

A3 = _____

V1 = _____

V2 = _____

V3 = _____

R1 = _____

6.

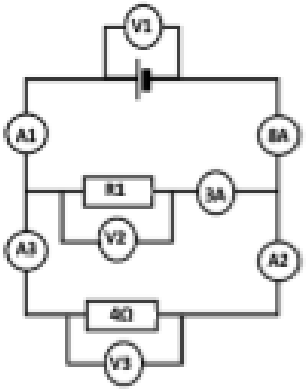

A1 = _____

A2 = _____

A3 = _____

V1 = _____

V2 = _____

R1 = _____

R2 = _____

Assessment of calculations in combined circuits

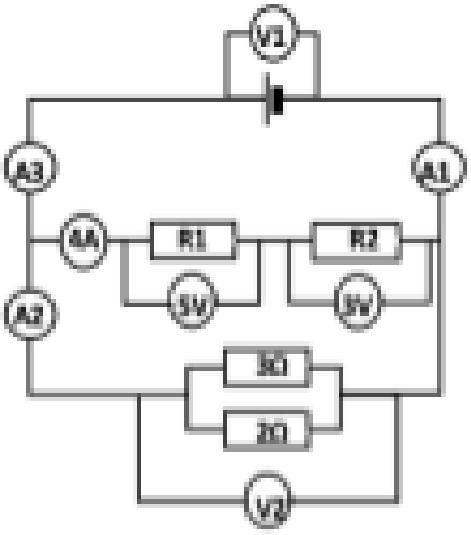

A1 = _____

A2 = _____

A3 = _____

V1 = _____

V2 = _____

V3 = _____

R1 = _____

Values for A1, V1, R1 ?	
☐	13.6A, 8V, 1.25Ohms
☐	13.6A, 6V, 0.75Ohms
☐	13.6A, 12V, 0.75Ohms
☐	4A, 8V, 1.25Ohms

Exam Practice question

A set of lights consists of 20 lamps connected in series to the 230 V mains electricity supply.

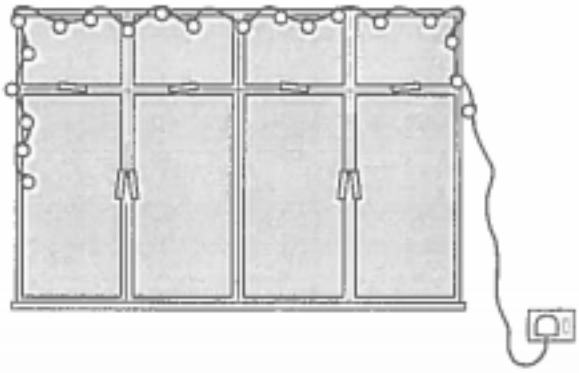

(a) When the lights are switched on and working correctly, the current through each lamp is 0.25 A.

(a) (i) What is the total current drawn from the mains supply?

.....

(1 mark)

(a) (ii) Use the equation in the box to calculate the charge passing through **one** of the lamps in 5 minutes.

charge = current × time

Show clearly how you work out your answer and give the unit.

.....

.....

.....

.....

Total charge = ...

(3 marks)

Tutorial 6 – Final Assessment and Post-SEF

What is the Purpose of Tutorial 6?

- To receive feedback on final assignments.
- To share examples of best practice with the other pupils in your group.
- To write targets for improvement in school lessons.
- To reflect on the programme including what was enjoyed and what was challenging.

Final assignment feedback

What I did well…	What I could have improved on…
•	•
•	•
•	•

My target for future work is…

Reflecting on Uni Pathways

What did you most enjoy about Uni Pathways?
•   •   •

What did you find challenging about the programme?	How did you overcome these challenges?
• • •	• • •

Notes

Notes

Notes

Series and Parallel circuits

Key Stage 4 Programme

researchersinschools.org