Stop resisting electrical resistance!

Key Stage 4 Revision Programme

Pupil Name	
Handbook Designed by	Dr Heckels

Timetable and Assignment Submission

Timetable – Tutorials

Tutorial	Date	Time	Location
1 (Baseline)			
2			
3			
4			
5			
6 (Final Assignment)			
7 (Feedback)			

Timetable – Homework Assignments

Tutorial 1		
Tutorial 2		
Tutorial 3		
Tutorial 4		
Tutorial 5		

Contents

Course Rationale **4**

Glossary of Keywords **5**

Tutorial 1 – Knowledge check **6**

Tutorial 2 – Ohm's Law **7**

A: Define resistance and Ohm's Law 7

B: Calculating resistance using Ohm's Law **8**

C: More challenge with Ohm's Law **9**

Tutorial 3 – Resistors in series **11**

A: What happens to resistance in series circuits? **11**

B: Calculating resistance in series circuits **12**

C: More challenge with resistance in series circuits **13**

Tutorial 4 – Resistors in parallel **15**

A: What happens to resistance in parallel circuits? **15**

B: Calculating resistance in parallel circuits **16**

C: More challenge with resistance in parallel circuits **17**

Tutorial 5 – I-V graphs **19**

A: I-V graphs **19**

B: Challenge with I-V graphs **20**

Tutorial 6 – Exam technique and final assessment **23**

Tutorial 7 - Feedback **25**

Notes **27**

Course Rationale

Electricity is everywhere in the modern world. We need to power our computers, games consoles, the lights in our house, the cooker in the kitchen, to heat the water for showers, cars, mobile phones, and even toothbrushes. To understand how our gadgets work, we need to understand how electricity flows around circuits, and electrical resistance forms the basis of this.

This short intervention course will help you secure your understanding of electrical resistance, and to help prepare you for your upcoming GCSE science qualifications. We will study what resistance is, what can cause resistance in a circuit, and how different types of circuits change electrical resistance. We will also discuss the best ways of preparing for GCSE exams, in science and other subjects, to help you feel more confident in summer.

Subject Vocabulary

Throughout the course, you will encounter keywords and their definitions.

Fill in this vocabulary table each week.

Word	Definition	In a sentence

Tutorial 1 – Knowledge check

Where are we now?

During this tutorial you will complete a short assessment to check your prior knowledge.

In the space below, write your reflections on the test, and write 3 things you feel confident with, and 3 things you'd like to improve on.

Reflections

3 things I'm confident with:

-
-
-

3 things I need to practice:

-
-
-

Tutorial 2 – Ohm's Law

Objectives

- A: Define resistance and Ohm's Law
- B: Calculating resistance using Ohm's Law
- C: More challenge with Ohm's Law

Starter:

Draw a circuit with two 1.5 V cells, a resistor and a 0.5 A bulb.

Objective A: Defining resistance

Electrical resistance, is a measure of how difficult it is for electricity it is to flow through something. With a higher resistance, wires, for example, will require a larger potential difference to produce a current through them.

Ohm's Law explains this relationship. It is defined by the equation:

$$V = I \times R$$

where,
- $\mathbf{V}$ is voltage in Volts (V)
- $\mathbf{I}$ is current in Amps (A)
- $\mathbf{R}$ is resistance in Ohms ($\mathbf{\Omega}$)

Practice A: Defining resistance

1) State the equation for resistance, defining the terms used.

2) Explain why the unit Ohms ($\mathbf{\Omega}$) is equivalent to V/A.

3) Write a sentence defining resistance in words.

4) Will a copper pipe or a wooden dowel have higher resistance?

5) Fuses allow currents up to a certain value to flow through a circuit. Which fuse would allow a higher resistance, one with a high current value or a low current value?

Assessment A: Defining resistance

Which statement is incorrect?

☐ Resistance is a measure of how difficult it is for electricity to flow.

☐ R = V x I

☐ Voltage is directly proportional to current.

☐ For the same value of voltage, as resistance increases, current flow decreases.

Objective B: Calculating resistance

Worked example 1
Calculate the voltage in a circuit when there is 0.2 A of current flowing and 7.5 Ω of resistance.

$V = ?$
$I = 0.2\ \text{A}$
$R = 7.5\ \Omega$

$V = I \times R$
$V = 0.2\ \times 7.5$
$\underline{V = 1.5\ \text{V}}$

Worked example 2:
Calculate the resistance in a circuit with a 9 V battery and the current is 0.3 A.

$V = 9\ \text{V}$
$I = 0.3\ \text{A}$
$R = ?$

$V = I \times R$
$R = V/I$
$R = 9/0.3$
$\underline{R = 30\ \Omega}$

Worked example 3:
Calculate the resistance through a 3 V LED bulb with a current of 20 mA.

$V = 3\ \text{V}$
$I = 20\ m\text{A}$
$= 0.002\ \text{A}$
$R = ?$

$V = I \times R$
$R = V/I$
$R = 3/0.002$
$R = 1500\ \Omega$
$\underline{R = 1.5\ \text{k}\Omega}$

Practice B: Calculating resistance

The table below links the potential difference across a component, circuit or part of a circuit with its resistance and the current passing through it. Fill in the missing values.

Potential difference (V)	Current (A)	Resistance (Ω)
	2.3	100
100		25
9	0.005	
	0.02	600
1000		10 000
230	13	

Assessment B: Calculating resistance

A resistor has a current of 3 A flowing through it when the potential difference across it is 15 V. What is the size of tis resistance?

☐ 0.2 Ω
☐ 5 V
☐ 45 Ω
☐ 5 Ω

Objective C: Challenge with Ohm's Law

Worked example 1

A student sets up an experiment to measure the potential difference (voltage) across a filament lamp.
She changes the current through the lamp.
The diagram shows the circuit she used.

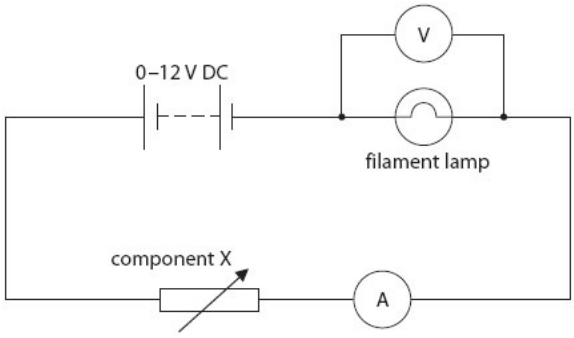

Calculate the resistance of the lamp when the current is 0.44 A and the potential difference is 10.0 V.

$V = I \times R$
$R = V/I$
$R = 10/0.44$
$\underline{R = 22.7\ \Omega\ (to\ 3\ s.f.)}$

Worked example 2:

A student uses this circuit to investigate how the current in a filament lamp varies with the potential difference (voltage) across the lamp.
When the variable resistor is at the half-way position, the ammeter reads 0.37 A and the voltmeter reads 4.0 V.
Show that the resistance of the filament in the lamp is about 11 Ω.

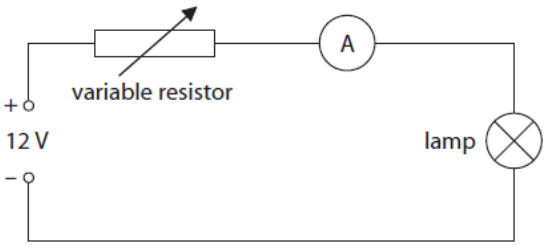

$V = I \times R$
$R = V/I$
$R = 4/0.37$
$\underline{R = 10.8\ \Omega\ (to\ 3\ s.f.)}$

Practice C: Challenge with Ohm's Law

1) If I have two electric drills that both run on 12 V, one uses a current of 2 A and one uses a current of 1.5 A, which one has the greater resistance? Show any working out.

2) Calculate the resistance of each of these 3 resistors:

a) A resistor with a potential difference of 12 V across it and a current of 0.20 A passing through it.

b) A resistor with a potential difference of 22 V across it and a current of 0.40 A passing through it.

c) A resistor with a potential difference of 9 V across it and a current of 0.03 A passing through it.

d) Which has the highest resistance?

3) A circuit is set up with a *fixed*-voltage power supply and the current is measured. If the resistance of that circuit is then doubled what happens to the size of the current? Try to explain with circuit diagrams and example values of voltage and resistance.

Assessment C: Challenge with Ohm's Law

A current of 5 mA passes through a resistor of 1 kΩ. Calculate the potential difference across the resistor.

☐ 0.005 V
☐ 5000 V
☐ 5 V
☐ 0.2 V

Final challenge

To find the remains of a wall buried under the ground an archaeologist can do a resistance survey. The resistance of the ground is measured. Stone and brick have a higher resistance than soil. Here are the measurements for three sites.

Site	Potential difference (V)	Current (A)
A	12	0.030
B	6	0.012
C	12	0.015

Calculate the resistance at each site.

Which site is the most likely to be the site of the wall?

Tutorial 3 – Resistors in series

Objectives

- A: What happens to resistance in series circuits?
- B: Calculating resistance in series circuits
- C: More challenge with resistance in series circuits

Objective A: What happens to resistance in series circuits?

In **series circuits**, the components are connected in series, or **in a line**.

If a component is disconnected, or removed, the whole circuit is **broken**, and current won't flow any more.

In a series circuit:

- The **total resistance** is the **sum of all resistances**.

$$R = R_1 + R_2 + R_3 \ldots$$

- The current through each resistor is the same value.
- The sum of the voltages across the resistors must add up to the cell voltage.

Practice A: What happens to resistance in series circuits?

1) State the equation for total resistance, when resistors are placed in series.

2) Describe how the voltage and current are distributed throughout a series circuit.

3) Write a sentence defining what happens to resistors in series, in your own words.

4) Name 3 examples of resistors that can be placed in series in a circuit.

Assessment A: What happens to resistance in series circuits?

Which statement is correct? Correct the statements that are wrong.

☐ The current in a series circuit is shared across all components.

☐ $R = R_1 - R_2 + R_3$

☐ When a component is disconnected in a series circuit, the current continues to flow through the other components.

☐ The sum of the voltages across the resistors must add up to the total cell voltage.

Objective B: Calculating resistance in series circuits

Worked example 1
Two resistors, each of resistance 60 Ω, are arranged in series and connected to a 12 V cell. Calculate the size of the current flowing in the circuit.

$V = 12\,V$
$I = ?$
$R = 60\,\Omega + 60\,\Omega$
$= 120\,\Omega$

$V = I \times R$
$I = V/R$
$\mathrm{I} = 12/120$
$\underline{I = 0.1\ \mathrm{A}}$

Worked example 2:
Two resistors in a series circuit have resistances of 10 Ω and 2 Ω. The total potential difference from the battery is 6 V. Calculate the current flowing through the circuit.

$R = 10\,\Omega + 2\,\Omega$
$= 12\,\Omega$
$V = 6\,V$
$A = ?$

$V = I \times R$
$I = V/R$
$I = 6/12$
$\underline{I = 0.5\,A}$

Practice B: Calculating resistance in series circuits

1) What is the total resistance of these resistors connected in series:
   a. 200 Ω and 180 Ω

   b. 500 Ω and 1.5 kΩ

2) A simple circuit contains two lamps A and B in series. The current flowing through the circuit is 0.5 A. **Complete the circuit diagram by adding all the information you know.**
   a. Lamp A has a resistance of 4 Ω. Calculate the potential difference across lamp A.

   b. Calculate the resistance of lamp B.

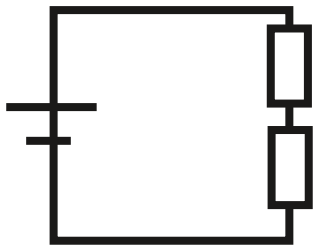

Assessment B: Calculating resistance in series circuits

Complete these sentences:

A resistor has a potential difference across it. When a second resistor is added in series with the first, the potential difference is _____ across both the resistors, so the current through the first resistor is _____.

When resistors are added in series, the total resistance of the circuit becomes _____.

Objective C: Challenge with resistors in series circuits

Worked example 1

In the circuit, X has a resistance of 20 Ω. Calculate:

a) The current in the resistors

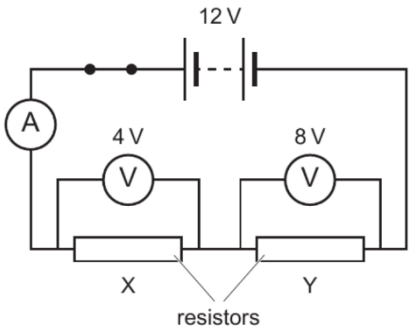

$V = I \times R$
$I = V/R$
$= 4/20$
$\underline{R = 0.2\ A}$

b) The resistance of Y

$V = I \times R$
$R = V/I$
$= 8/0.2$
$\underline{R = 40\ \Omega}$

Worked example 2:

In a circuit, two resistors are placed in series. One of the resistors is known to have a resistance of 16 Ω, and has a potential difference of 4 V across it. The voltage across the cell is 12 V.

1) Calculate the missing potential difference value across the second resistor.

$V = V_1 + V_2$
$V_2 = V - V_1$
$= 12 - 4$
$\underline{V_2 = 8\ V}$

2) Calculate the current flowing through the first resistor.

$V = I \times R$
$I = V/R$
$= 4/16$
$\underline{I = 0.25\ A}$

Practice C: Challenge with resistors in series circuits

For questions 1 and 2, use the diagram in worked example 1.

1) In the diagram, the resistors X and Y are changed for two 30 Ω resistors. The potential difference across each is 6 V. Calculate:
   a. The current,

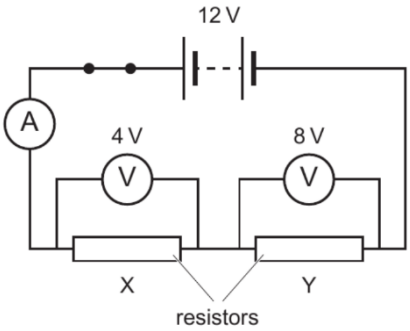

   b. The total resistance.

2) In the diagram, X is 20 Ω and Y is changed to 100 Ω. Compare and contrast the current through, and the potential difference across, X and Y.

3) A 24 V power supply is connected in series with a 3 kΩ resistor.
   a. What is the current in the circuit?

   b. A 5 kΩ resistor is added in series. What is the total resistance of the circuit?

   c. What is the new current in the circuit?

   d. What is the new potential difference across:
      i. the 3 kΩ resistor
      ii. the 5 kΩ resistor?

Assessment C: Challenge with resistors in series circuits

A circuit has a total potential difference of 6 V. Two resistors of 3 Ω and 2 Ω are connected in series. What is the current flowing through the first resistor of 3 Ω?

☐ 2 A
☐ 1 A
☐ 0.5 A
☐ 0.66 A

Tutorial 4 – Resistors in parallel

Objectives

- A: What happens to resistance in parallel circuits?
- B: Calculating resistance in parallel circuits
- C: More challenge with resistance in parallel circuits

Objective A: What happens to resistance in parallel circuits?

In **parallel circuits**, the components are connected **separately**, in loops, to the power supply.

If a component is disconnected, or removed, it will hardly affect the circuit at all.

In a parallel circuit:

- The **total resistance** is always less than that of the branch with the smallest resistance.
- The current through each component depends on its resistance. Use Ohm's Law.
- The current through the whole circuit is shared between the branches. The total current flowing is equal to the sum of the current in each branch.

$$A = A_1 + A_2 + A_3 \ldots$$

- The potential difference is the same across all components in the circuit, equal to the potential difference of the battery.

$$V = V_1 = V_2 = V_3 \ldots$$

Practice A: What happens to resistance in parallel circuits?

1) State the equation for total current, when resistors are placed in parallel.

2) Describe how the voltage and current are distributed throughout a parallel circuit.

3) Write a sentence defining what happens to resistance for components in parallel, in your own words.

4) Think of a real-life example where parallel circuits are used.

Assessment A: What happens to resistance in parallel circuits?

Which statement is incorrect?

☐ The current in a parallel circuit is shared across all components.

☐ The potential difference in a parallel circuit is shared across all components.

☐ When a component is disconnected in a parallel circuit, the current continues to flow through the other components.

☐ The sum of the current across the resistors must add up to the total current.

Objective B: Calculating resistance in parallel circuits

Worked example 1
A parallel circuit has two identical resistors. A current of 4 A flows from the battery. What is the value of the current through each resistor?

The total current is shared across the two identical components.

$I_{TOTAL} = 2 \times I$
$I = I_{total}/2$
$= 4/2$
$\underline{I = 2\ A}$

Worked example 2:
Two resistors are arranged in parallel as shown in the circuit diagram. Calculate:

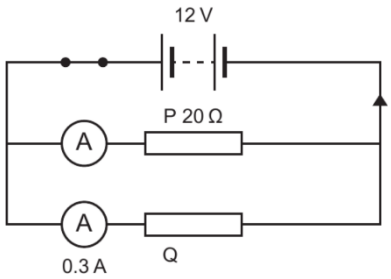

1) The resistance of Q

$V = I \times R$
$R = V/I$
$= 12/0.3$
$\underline{R = 40\ \Omega}$

2) The current through resistor P

$V = I \times R$
$I = V/R$
$= 12/20$
$\underline{I = 0.6\ A}$

3) The total current supplied through the battery.

$\underline{Total\ current = 0.3\ A + 0.6\ A = 0.9\ A}$

Practice B: Calculating resistance in parallel circuits

1) Using the circuit in worked example 2, two 200 Ω resistors are connected in place of P and Q. Calculate the total resistance of the circuit (Hint: work out the total current first). **Draw an accurate diagram for the new circuit.**

2) Two 30 Ω resistors are connected in place of P and Q. Explain whether the total resistance of this circuit is larger or smaller than 30 Ω.

3) A parallel circuit is connected as shown. Complete the readings on the voltmeters and ammeters on the diagram.

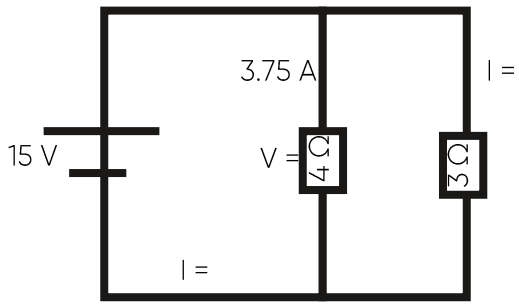

Assessment B: Calculating resistance in parallel circuits

Complete these sentences:

When resistors are added in parallel, there are more paths for current to pass so the total current is _____.

When resistors are added in parallel, the total resistance of the circuit becomes _____.

Objective C: Challenge with resistors in parallel circuits

Worked example 1

A 40 Ω and a 20 Ω resistor are connected in parallel with a 10 V power supply.

a) Calculate the current through the 40 Ω resistor.

$V = I \times R$
$I = V/R$
$= 10/40$
$\underline{I = 0.25\ A}$

b) Calculate the current through the 20 Ω resistor.

$V = I \times R$
$I = V/R$
$= 10/20$
$\underline{I = 0.5\ A}$

c) State the total current drawn from the power supply.

$\underline{Total\ current = 0.25\ A + 0.5\ A = 0.75\ A}$

d) Calculate the total resistance of this parallel circuit.

$V = I \times R$
$R = V/I$
$= 10/0.75$
$\underline{R = 13\ \Omega}$

Practice C: Challenge with resistors in parallel and series circuits

You have three 100 Ω resistors. Draw diagrams to explain how they should be connected to give the maximum and the minimum total resistance.

You have a power supply of 12 V. For your two diagrams, calculate the current through and the potential difference across each resistor.

Assessment C: Challenge with resistors in parallel circuits

A circuit has a total potential difference of 6 V. Two resistors of 4 Ω and 2 Ω are connected in parallel. What is the current flowing through the first resistor of 4 Ω?

☐ 2 A
☐ 1 A
☐ 0.5 A
☐ 0.66 A

Tutorial 5 – I-V graphs

Objectives

- A: I-V graphs
- B: Challenge with I-V graphs

Objective A: I-V graphs

I-V graphs show how the **current** flowing through a resistor, or component, **varies** as the **potential difference** across it varies. There are 3 I-V graphs you need to know and be able to explain.

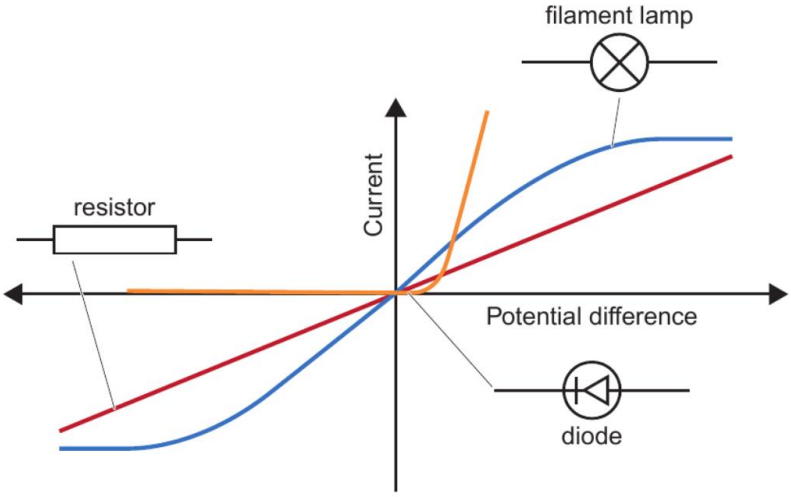

<u>Fixed resistor</u>
When the potential difference changes across a fixed resistor, the current changes by the same percentage – they are in **direct proportion**. This gives a straight line graph, through the origin, with a constant gradient.
This is because the temperature remains constant, so the resistance does too.

<u>Filament lamp</u>
When a current flows through a filament lamp, the filament heats up and glows. This leads to an increase in the filament's resistance.
The slope or gradient decreases as the potential difference increases, as resistance is also increasing.

<u>Diode</u>
Current can only flow in one direction. A diode has a low resistance in one direction, but a very high resistance if the potential difference is in the opposite direction.

Practice A: I-V graphs

1) State what a fixed resistor is.

2) For a fixed resistor, if the potential difference increases by 20%, by what percentage will the current increase?

3) How can you tell from the I-V graphs that for a filament lamp current is not directly proportional to potential difference?

4) Why might a diode be considered similar to a fixed resistor?

Assessment A: I-V graphs

An I-V graph shows a straight line through the origin. The component shown is a:

- ☐ Thermistor
- ☐ Diode
- ☐ Fixed resistor
- ☐ Filament lamp

Objective B: Challenge with I-V graphs

<u>Drawing an I-V graph</u>
You can use a circuit like the one shown here to test components and collect data about current and potential difference.
Here a filament lamp is being used.

- Closing the switch will complete the circuit and allow readings for current and potential difference to be taken.
- The variable resistor is used to change the resistance of the circuit, giving multiple readings of current for different potential differences.
- To look at negative potential differences, the cell can be reversed.

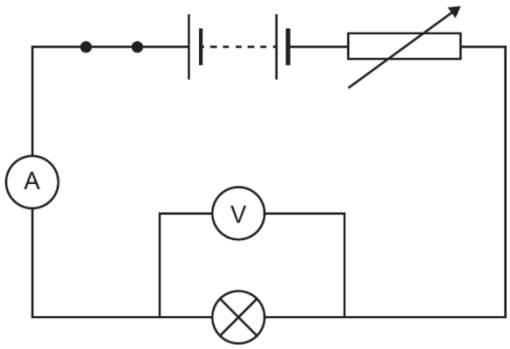

<u>Worked example 1</u>
A student is testing the resistance of a filament lamp. She varies the potential difference across the lamp and records the current that flows.
Sketch an I-V graph for the experiment and explain the shape.

As the current goes up, the temperature increases. This increases the resistance of the filament lamp. This decreases the gradient, giving the graph a curved shape.

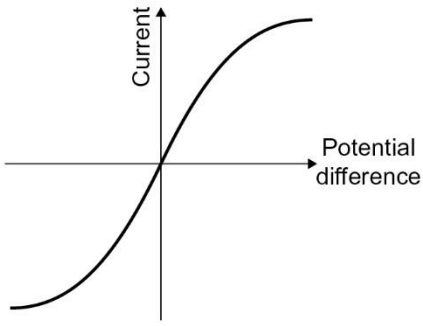

Practice B: Challenge with I–V graphs

1) Explain how you would use the circuit shown above to find out how the resistance of a diode changes with potential difference. Predict what will happen.

2) You are going to explore how increasing the brightness of a filament lamp affects resistance.
    a. List the apparatus you need.
    b. Draw a circuit diagram of your experiment.
    c. Suggest what measurements you would take.

3) A student is given a box with unlabelled components. They are asked to identify the components by measuring how resistance changes with potential difference. Draw diagrams to show the circuit they should build and explain how they can use their data to identify the component.

Assessment B: Challenge with I-V graphs

Cross out the incorrect answers in the following sentences.

- The potential difference across a fixed resistor is 10 V. There is a 2 A current flowing through it. The resistance of the resistor is (0.5 Ω / 2 Ω / 5 Ω / 10 Ω / 50 Ω).
- What will happen to the current if the potential difference doubles? (it doubles / it halves / it stays the same)
- When the potential difference across a fixed resistor doubles, the current (doubles / halves / stays the same). This is because the resistance (doubles / halves / stays the same).

Final challenge

A **light-emitting diode** (LED) has very low resistance when the potential difference across it is higher than 2 V.

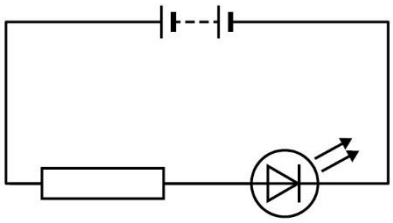

a) If the potential difference across a diode is greater than 2 V what will happen to the current through it? Suggest what effect this may have on the LED.

b) Suggest why a light-emitting diode usually has a fixed resistor connected in series with it.

c) The series circuit has a 5 V battery and a fixed resistor in series with the LED. Calculate the value of resistance needed to make sure the potential difference across the LED is not greater than 2 V and the current through it is not greater than 10 mA.

d) If this value of resistor is not available, explain whether a resistor with a higher or a lower value should be used.

Tutorial 6 – Exam technique and final assessment

Exam technique

On the following lines, make notes on the group discussion on Science exam techniques.

Where are we now?

You have now completed your final assessment. During the next tutorial, you will be given personalised feedback to see how you've improved since the beginning of the course.

In the space below, write your reflections on the test.

Reflections

3 things I've improved on:

-
-
-

3 things I'd still like to work on:

-
-
-

Tutorial 7 - Feedback

What is the Purpose of Tutorial 7?

- To receive feedback on final assignments.
- To share examples of best practice with the other pupils in your group.
- To write targets for improvement in school lessons.
- To reflect on the programme including what was enjoyed and what was challenging.

Final assignment feedback

What I did well...	What I could have improved on...
•	•
•	•
•	•

My target for future work is...

Reflecting on Uni Pathways

What did you most enjoy about Uni Pathways?
•   •   •

What did you find challenging about the programme?	How did you overcome these challenges?
• • •	• • •

Notes

Notes

Notes

Stop resisting electrical resistance!

Key Stage 4 Programme

researchersinschools.org