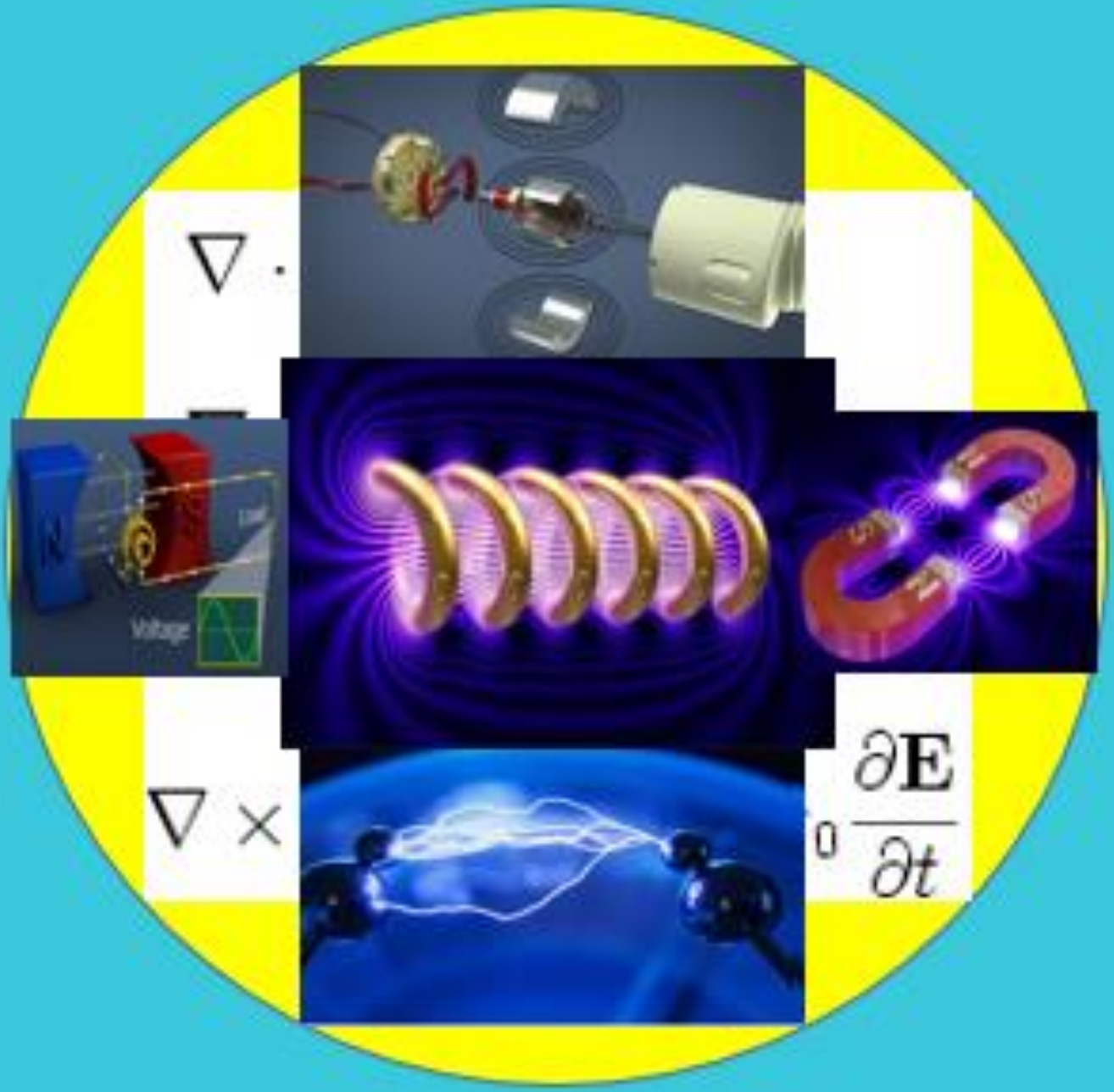

USES OF ELECTROMAGNETISM

Pupil Name

Handbook Designed by Dr A C Dinham PhD

Timetable

Timetable – Tutorials

Tutorial	Date	Time	Location
Baseline Assessment			
Tutorial 1			
Tutorial 2			
Tutorial 3			
Tutorial 4			
Final Assessment			
Feedback			

Timetable – Homework Assignments

Homework Assignment	Description	Due Date
Tutorial 1		
Tutorial 2		
Tutorial 3		
Tutorial 4		

Contents

Course Rationale	P4
Glossary of Keywords	P5
Baseline Assessment	Separate
Tutorial 1	P6
Activity 1	P6
Activity 2	P7
Activity 3	P8
Tutorial 2	P10
Activity 1	P11
Activity 2	P12
Activity 3	P13
Tutorial 3	P15
Activity 1	P15
Activity 2	P16
Activity 3	P18
Tutorial 4	P20
Activity 1	P21
Activity 2	P22
Notes	P23 - 25

Course Rationale

Uses of Electromagnetism is a key element in P4 - Electromagnetism - of the OCR curriculum for GCSE Physics; it is also one of the more difficult topics when students meet it for the first time. The intent of this tutorial course is to help students gain a full understanding of the concepts involved.

Electromagnetism is used in a wide range of applications, including electromagnets, electric motors, generators, transformers and household and industrial appliances. Students need to visualize the geometry of the situations in which these effects are applied and the tutorials for this course will help in doing this. A range of diagrams and images are included so that students become familiar with the physical situations involved, thereby helping understanding to come more easily.

The tutorials also include an extensive range of practical examples, some of which are taken from past GCSE papers, and a number of these will be worked through within the tutorials themselves. Homework assignments will supplement the sessions and help students to practice further the techniques required. By the end of the course, students will develop greater confidence and understanding in this subject and this should enable them to do well in this part of the GCSE examination.

Subject Vocabulary

Word	Definition	In a sentence

TUTORIAL 1: OCR P4.1, 4.2: Magnetic Fields and their Effects

Keywords: magnetic fields, lines of force, the motor effect, Fleming's Left hand Rule (FLHR)

Objectives this tutorial:

A. Describing fields formed around permanent magnets, electromagnets and current carrying conductors
B. Applying Fleming's Left Hand Rule to determine the motor effect in magnetic fields
C. Using knowledge of electromagnetic fields to describe how electric motors work

Starter: Describe the field lines around: (1) two permanent magnets with (a) like poles facing and (b) unlike poles facing; (2) a straight conducting wire carrying current and (b) a single loop of conducting wire

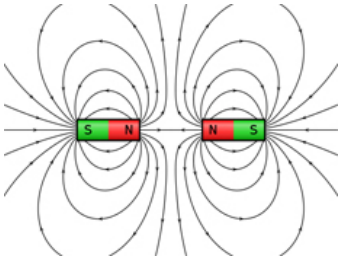

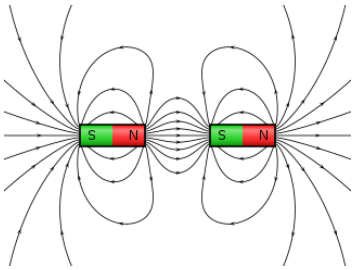

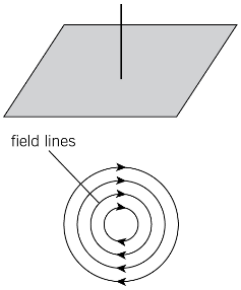

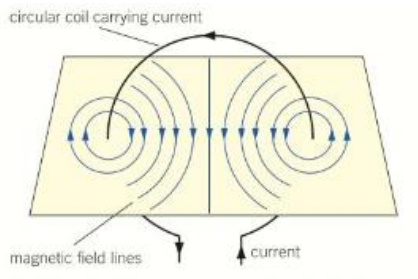

Extension: (1) What does a field line indicate?; (2) Describe 2 ways of plotting field lines of force around a magnet; (3) What is the difference between the Earth's geographic north pole and its magnetic north pole?

Objective A: Describing magnetic fields around permanent magnets and electromagnets

The field when two magnetic fields act is the vector sum from both fields at each point; draw the field lines formed when a current carrying wire is placed in a uniform magnetic field; which way does the resultant force act on the wire?

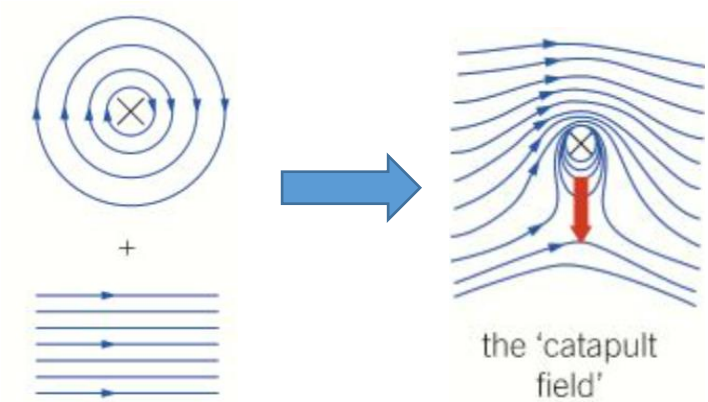

Lines of force are close together where the magnetic field is strongest

The net force on the wire is caused by the difference in field strengths, that is, how close the field lines are together either side of the wire

Practice A: Describing Magnetic Fields Formed

1. What 3 factors does the strength of the field of an electromagnet depend upon?

2. What 3 substances have magnetic properties?

3. In the diagram below, the pole at A is a north pole, what is the pole at B?

4. Complete the field lines of force round the two poles A and B.

5. If the pole at B is opposite in polarity to the one shown and A is the same polarity, draw the field lines in this case.

6. Use the field lines of force around a single loop of wire to draw the field lines for a solenoid, including the direction of the field lines in respect to the direction of current in the solenoid.

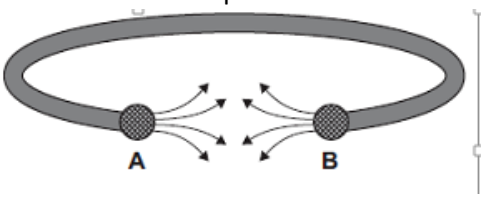

Assessment A: Describing magnetic fields around permanent magnets and electromagnets

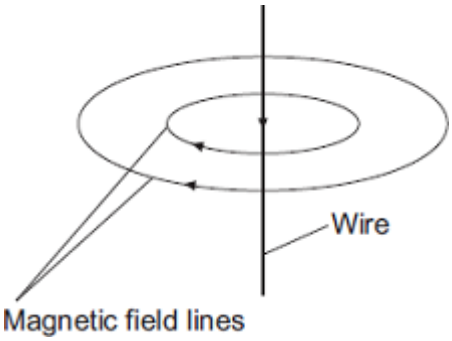

1. What happens if the direction of current in the wire is reversed?

2. What happens if the current in the wire is doubled?

3. What is the strength of the field in the outer loop shown in respect of the strength of the field in the inner loop?

4. Which direction would the north pole of a compass point?

5. How could the direction of the field lines be mapped out in practice?

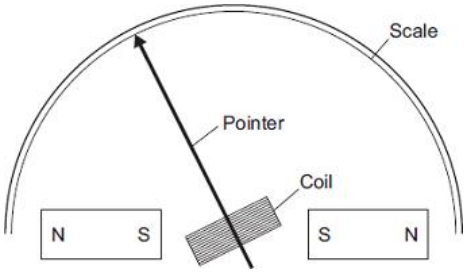

An ammeter has been built which consists of a coil placed in a uniform magnetic field. When there is a current in the coil, the force acting on the coil should causes the coil to rotate and the pointer moves across the scale.
(1) The equipment has not been set up correctly – what change would make it work?
(2) Name two things which would increase the sensitivity of the device as an ammeter

Objective B: Applying Fleming's Left Hand Rule to determine the motor effect in magnetic fields

Fleming's Left Hand Rule (FLHR) is used to determine the direction which a current carrying wire conductor is deflected in a magnetic field.

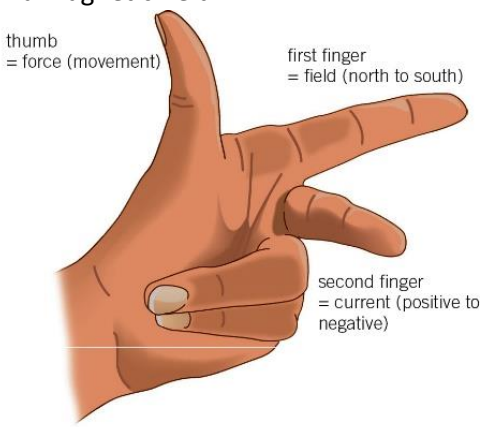

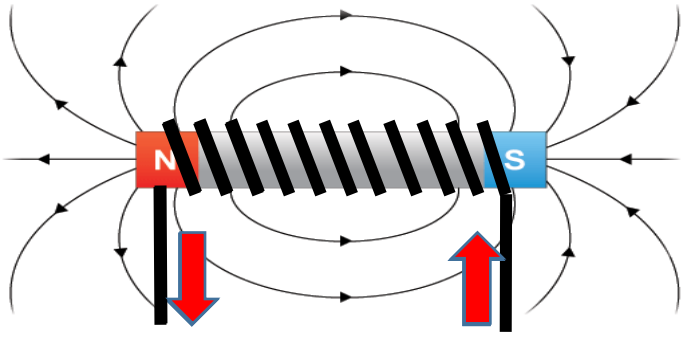

The right hand grip rule detrmines the direction of the field lines formed by a coil of wire and in an electromagnet

The force on a conducting wire in a magnetic field is F (N) = B (in tesla (T)) x I (in amps (A)) x L (in m)

Practice B: Applying Fleming's Left Hand Rule to the motor effect in magnetic fields

1. What are the units of tesla in terms of **newtons (N), amps (A) and metres (m)**

2. Describe what happens to the force on the wire in the diagram on the right when the current reverses direction.

3. The length of the wire in the magnetic field is 5cm and the strength of the field is 5mT. If the current is 0.5A, what is the force on the wire?

4. What would happen if an alternating electric current was passed through the wire?

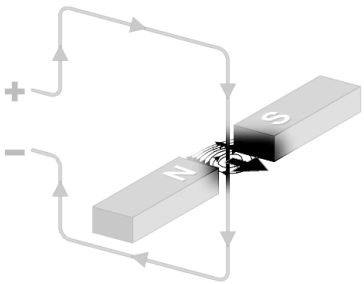

Assessment B: Apply Fleming's Left Hand Rule to determine the motor effect in magnetic fields

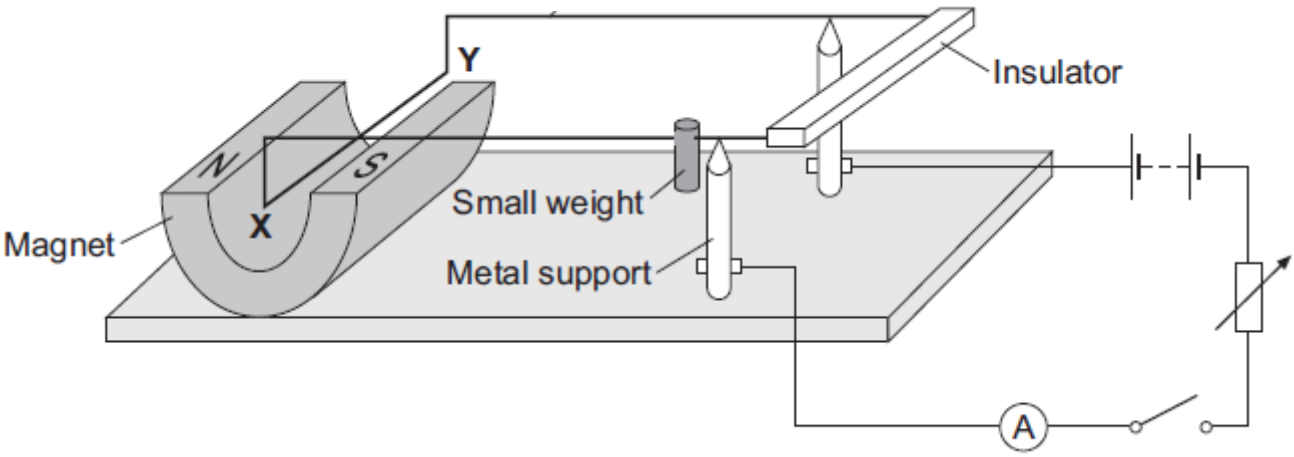

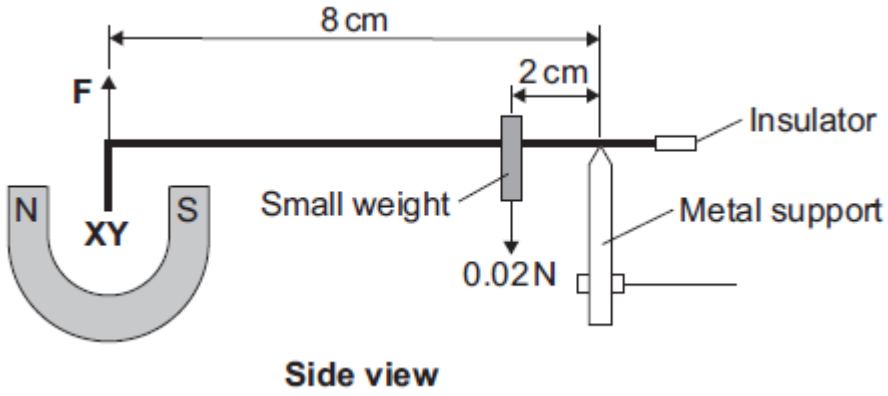

Describe how the equipment in the two diagrams could be used to show that force is proportional to current (assume that the small weight can be slid along the wire that it is attached to).

What else could you do in order to show that F = B x I x L?

Objective C: Using knowledge of electromagnetic fields to describe how electric motors work

Figure 1

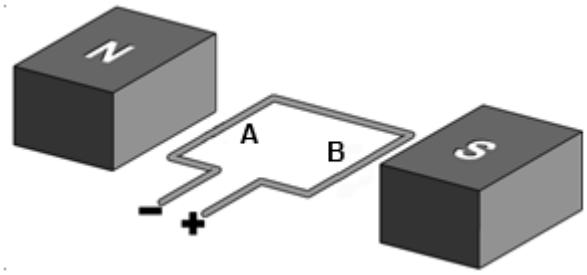

Figure 2

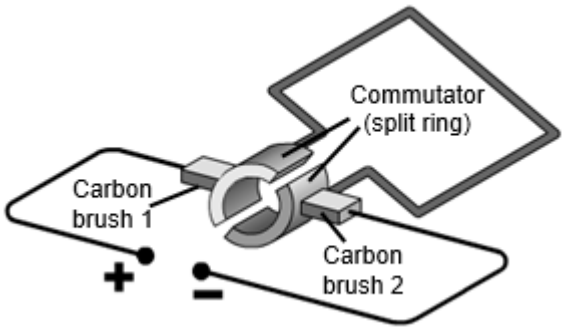

Draw the direction of the current on sides A and B of the coil in figure 1 and show the direction of the permanent magnetic field. What directions do forces act on each side A and B of the coil?

If the coil in Figure 1 was replaced by the coil and commutator in Figure 2, describe in 4 steps what happens to the coil when current is flowing. Why is the commutator necessary to keep the coil spinning?

1. In the diagram below, suggest **two** changes to the device, each one of which would make the coil spin faster.

2. Suggest **two** changes to the device, each one of which would make the coil spin in the opposite direction.

3. Arrange the following statements in the correct order to describe how the coil spins:

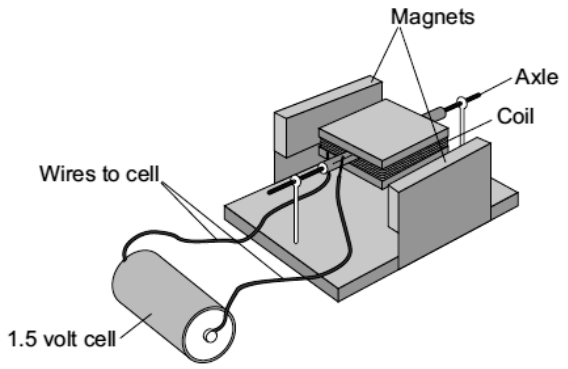

M – The magnetic field interacts with the magnetic field of the permanent magnets
N – A magnetic field is created around the coil
O – The power supply applies a potential difference across the coil
P – This creates a force that makes the coil spin
Q – A current flows through the coil

Assessment C: Using knowledge of electromagnetic fields to describe how electric motors work

1. What current is needed to cause a force of 0.04N to act on a 25 cm length of wire in a 0.22T magnetic field?

2. Complete the paragraph below about the principle behind the electric motor:

When a current-carrying wire loop is placed inside a magnetic field, there will be a _____ on one side of the loop trying to push it upwards. There will also be a force on the _____ side of the loop trying to push it _____. This makes the loop _____. For the loop to rotate continuously in one direction, the _____ of the force on each side must change every _____ turn. This is done by using a split-ring _____ which swaps the contacts every half turn.

3. Which **three** of the following statements on increasing the speed of an electric motor are **correct**?

   a. The speed of a motor can be increased by decreasing the number of turns on the coil
   b. The speed of a motor can be increased by increasing the strength of the magnetic field
   c. The speed of a motor can be increased by using a commutator
   d. The speed of a motor can be increased by increasing the size of the current in the coil
   e. The speed of a motor can be increased by increasing the number of turns on the coil

Tutorial 1: Plenary

Write down whether the following statements are true or false:

1. The magnetic field at any point from two sources can be found by adding together the magnetic field vectors from each individual source
2. The magnetic field is weakest where the field lines are most densely accumulated
3. The strength of a magnetic field created by a solenoid is determined by the total number of coils making up the solenoid
4. The field strength around a single wire does not change in the vicinity of the wire
5. The force on a conducting wire is proportional to the length of wire in the magnetic field
6. The speed at which an electric motor spins depends only upon the current, the number of coils of wire and the strength of the magnetic field in which the coils rotate
7. The direction in which an electric motor will spin can be determined by Fleming's Left hand Rule
8. The coils of an electric motor would not move if carbon brushes were used that were not linked through a split ring commutator

TUTORIAL 2: OCR P4.2: Induced Electric Currents and the Generator/Dynamo Effect

Keywords: induced current, generators, dynamos, alternating current

Objectives this tutorial:

A. Describing the effect of induced electromotive force (emf) within a conducting wire or coils of wire
B. Applying principles of electromagnetic induction to ac generators and dc dynamos
C. **EXTENSION:** Describing how a back electromotive force (emf) is created, using Lens' Law

Starter: (1) Determine the direction of current in the conducting wire which induces the magnetic field lines shown in figure 1; determine the field lines induced by the current in the solenoid shown in figure 2 and indicate the north and south poles of the electromagnet formed

Figure 1

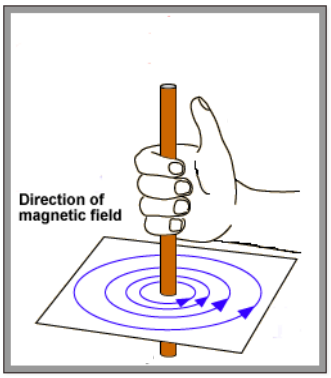

Figure 2

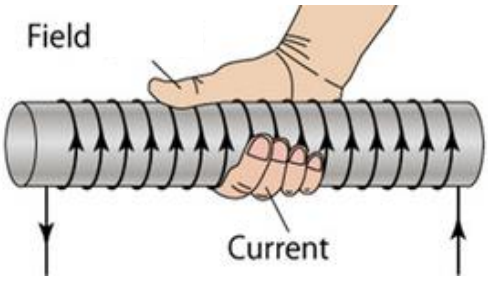

What determines the strength of the field lines in each case – figures 1 and 2?

How could you demonstrate the field lines in the set up shown in figure 1?

What experiment could you carry out to demonstrate the factors affecting field strength in the set up shown in figure 2?

Objective A: Describing the effect of induced electromotive force (emf) within a conducting wire or coils of wire

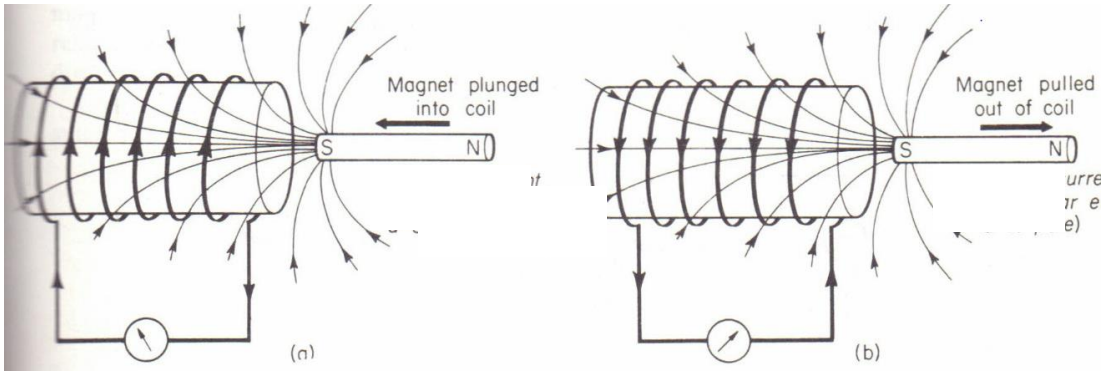

When a magnet moves into or out of a conducting coil of wire, the changing magnetic field within the coil induces an electromotive force (emf), which causes a current to flow in the conducting wire

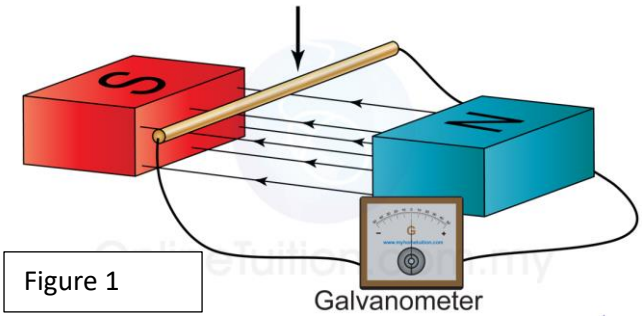

Figure 1

When a length of conducting wire is moved within a magnetic field, an emf is induced in the wire, which causes an electric current to flow

Practice A: Describing the effect of induced electromotive force (emf) within a conducting wire or coils of wire

1. In the diagram above (Figure 1), what would happen if the wire was moved in the opposite direction?

2. What would happen if the north and south poles were switched so that they were opposite to what is shown (assume that the wire is moved in the same direction as shown in the diagram)?

3. What 3 things could you change to change the size of the current induced in the wire?

4. Where does the energy come from in order to generate a current in the wire?

Assessment A: Describing the effect of induced electromotive force (emf) within a conducting wire or coils of wire

1. In figure 1, the ends of the wire are connected to the ends of a piston which makes it move up and down in the magnetic field. Describe what you would see on the galvanometer?

2. Explain why the process described in question 1 above is not used in practice to generate alternating current.

3. In the diagram shown (Figure 2), the actions in the table are taken with the magnet and the coil. Describe what happens to the ammeter reading.

Figure 2

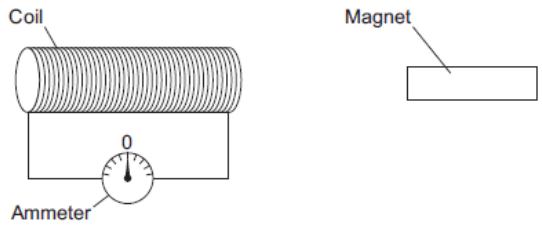

Action taken by teacher	What happens to the ammeter reading?
Holds the magnet stationary and moves the coil slowly towards the magnet	
Holds the magnet stationary within the coil	
Moves the magnet quickly towards the coil	
Reverses the magnet and moves it slowly towards the coil	

4. A student investigated how the number of turns on the coil of wire affects the maximum voltmeter reading. The student changed the number of turns on the coil of wire, then moved the magnet into the coil. The student recorded the maximum voltmeter reading.

To obtain valid data, suggest **two** variables that the student should control in this investigation.

Figure 1

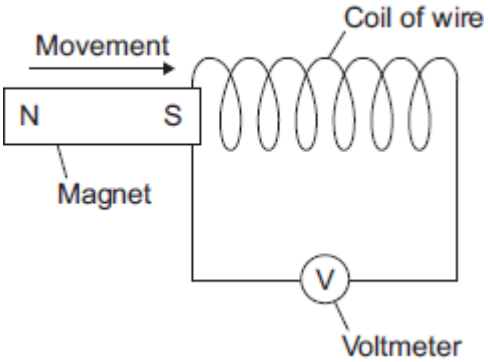

Objective B: Applying principles of electromagnetic induction to dc generators and ac generators

THE AC GENERATOR

1. In the diagram below, compare the coil rotating in the magnetic field with the worked example above and determine which way a current would flow in the coil at the instant shown.
2. At the instance shown, determine which way current would flow in the circuit linked to the coil via the brushes and slip rings.
3. Determine which way current would flow through in the external circuit when the coil has rotated through 180° (half a full turn).
4. Explain the shape of the output voltage produced by an alternator.

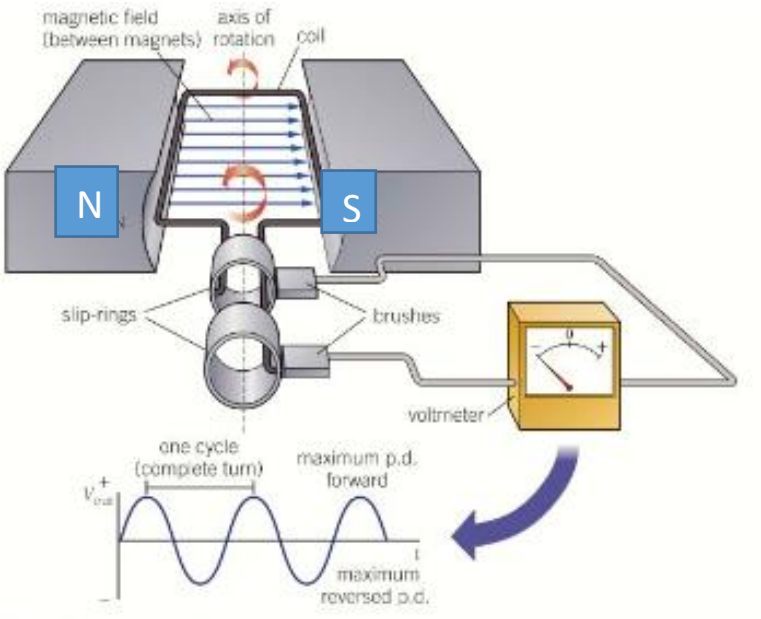

Practice B: Applying principles of electromagnetic induction to ac generators and dc generators

THE GENERATOR

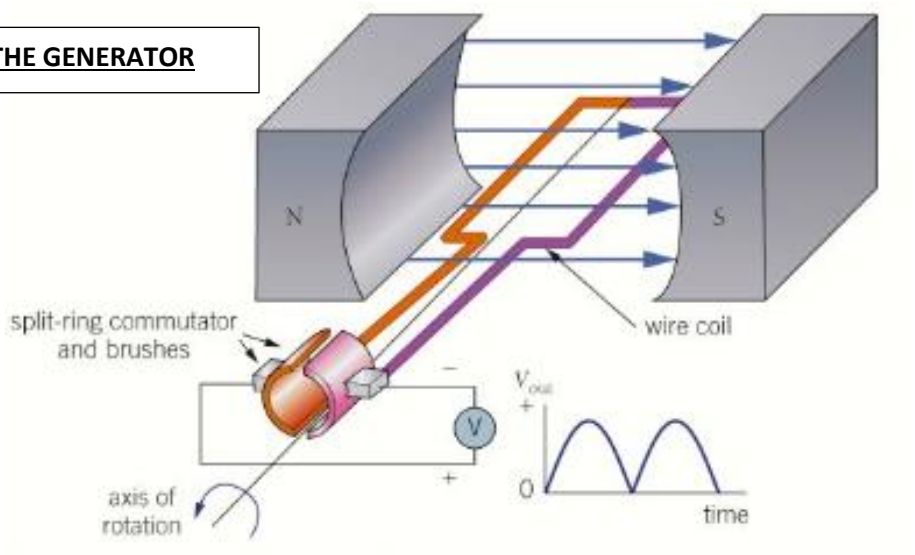

1. Explain how the output voltage is produced in the dynamo shown in the figure on the left.

Assessment B: Applying principles of electromagnetic induction to ac generators and dc generators

1. The north pole of a magnet is moved into a coil of wire connected to a voltmeter.
The voltmeter reads +2 mV. Match the descriptions with the possible readings on the voltmeter.

DESCRIPTION	VOLTMETER READING
The magnet is pulled out of the coil at twice the speed.	0 mV
The south pole of the magnet is moved in at the same speed.	−4 mV
The north pole of the magnet is moved in at half the speed.	+1 mV
The magnet is left inside the coil.	−2 mV

2. Sort the following statements into those true of a **dc generator**, true for an **ac generator** only, or true for **both:**

a. has slip-rings; has a split ring commutator; b. generates alternating current
c. spinning the coil faster increases the output; d. generates a direct current
e. using a stronger magnetic field increases the output; f. using more turns on the coil increases the output

3. In the diagram on the right, is the device shown an ac generator or a dc generator?

(1) Draw a diagram showing the voltage it produces against time

(2) Name 2 ways in which you could increase the maximum induced potential difference generated by the coil

(3) What would the device be called if the two slip rings were replaced by a split ring commutator?

(4) Draw a graph of the output voltage against time for the device in (3) above?

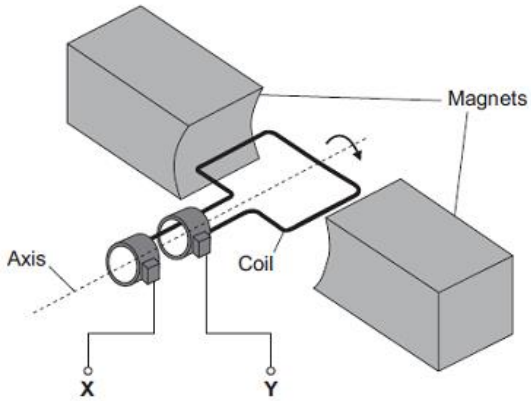

Objective C: EXTENSION (if time) Describing how a back electromotive force (emf) is created, using Lens' Law

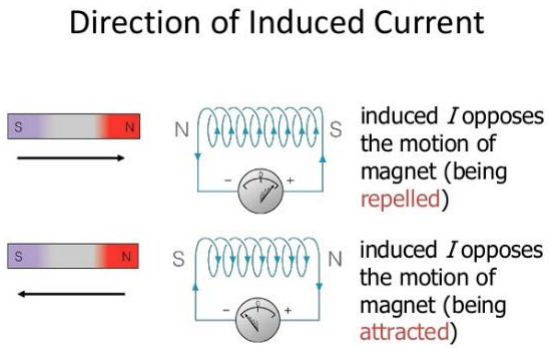

"The direction of the induced electromotive force is such as to try to oppose the effect causing it" - Lens' Law.

If this were not true, we could create energy from nothing! HOW?

Think about how Lens' Law might apply in an electric motor

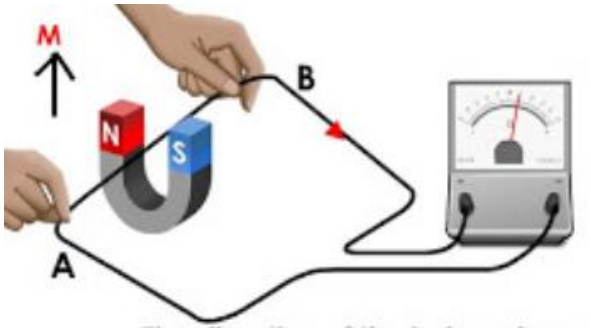

How does Lens'Law apply when we move a conducting wire in a magnetic field?

Hint: Use FLHR to determine in which direction a force would act on the wire shown in the diagram on the left

Worked Example C: Describing how a back electromotive force (emf) is created, using Lens' Law

Use Lens' Law to verify the direction of current in the diagram above.

Step 1: The wire is moved up in the magnetic field – electromagnetic induction creates a potential difference which drives a current through the wire to the galvanometer.
Step 2: A conducting wire carrying a current will experience a force, by the motor effect, in a direction given by FLHR
Step 3: The force created by the motor effect must oppose the motion causing the potential difference – work out which way the current must flow using FLHR!
Step 4: If the motor effect force did not oppose the motion causing the potential difference, we could create energy for free! How?

Assessment C: Describing how a back electromotive force (emf) is created, using Lens' Law

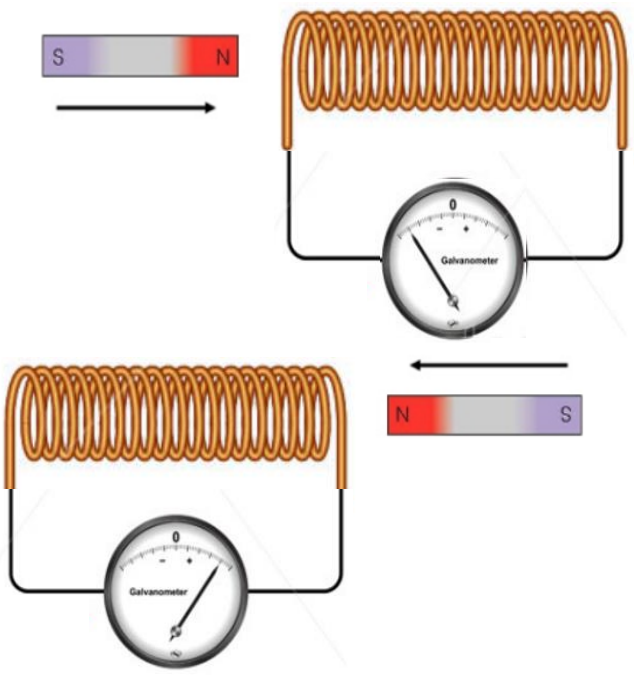

Write down Lenz's Law
Use Lenz's Law to determine which way the current flows in each of these examples

Hints:

Why is there a second magnetic field present, in addition to the magnetic field of the moving magnet?

Why does it need a force to move the magnet in and out of the coil?

If the potential difference or emf had been induced in the other direction, what would have happened to the magnet and why would this mean that energy had not been conserved?

Tutorial 2: Plenary

Insert the correct words missing from the following paragraph:

The right hand grip rule can be used to determine the direction of the _____ induced by a current in a wire. The same rule can be used to determine the north and south poles of an _____. When a magnet moves into the coils of a solenoid, a current is induced by the _____ magnetic field. The direction of the current induced is such as to set up a magnetic field which _____ the motion of the magnet causing the current – this is known as Lenz's Law. The size of the current induced depends upon the _____ that the magnet is moved into the solenoid, the _____ of the magnet and the number of coils making up the electromagnet. A current can also be _____ by moving a single wire in a magnetic field. A generator uses brushes to create an _____ whereas a _____ uses a split ring commutator to generate a _____; the dc current is not, however, constant but varies with each _____ rotation of the coil used. Lenz's law ensures that _____ cannot be created out of nowhere by moving a magnet into the coils of a solenoid.

Select from:

resists; energy; alternating current; half; electromagnet; changing; strength; induced; speed; direct current; dynamo; magnetic field.

TUTORIAL 3: OCR P4.2: Transformers

Keywords: alternating current, induced emf, step up and step down transformers, the transformer equation, using transformers for electrical supplies (the mains)

Objectives this tutorial:

A. Describing how a transformer works
B. Explaining what is meant by step up and step down transformers
C. Applying the transformer equation to practical situations

Starter: (1) Figure 1 shows one arm of a transformer which is supplied by an alternating current; if the instantaneous current is in the direction shown, verify that the magnetic field set up in the arm of the transformer shown has north and south poles as indicated; (2) if at the instance shown, the alternating current is increasing, what does this imply about the strength of the magnetic field; (3) why does this have the same effect as moving a magnet upwards in the set of coils on the right of the transformer and downwards on the set of coils on the left of the transformer; (4) what effect does this have on the coils on the right hand side of the transformer?

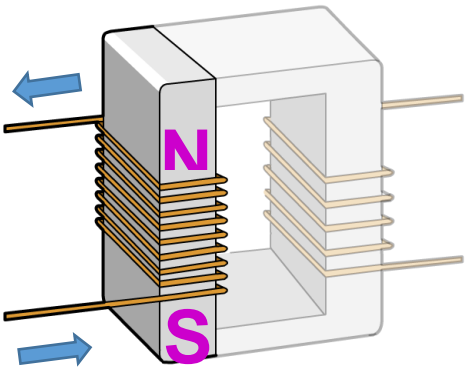

Figure 1

Left hand arm

Right hand arm

Objective A: Describing how a transformer works

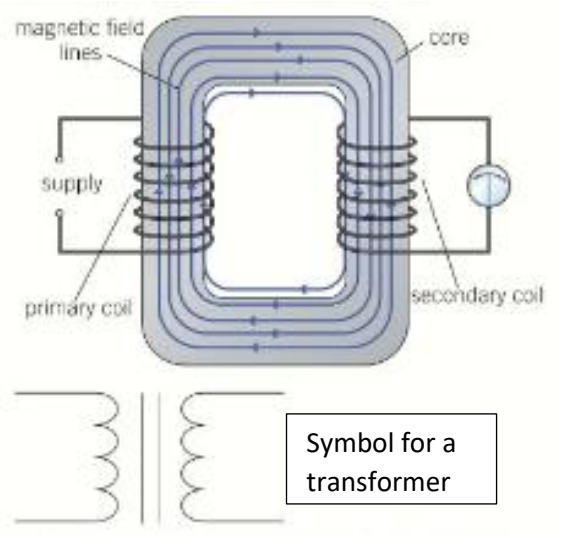

Transformers are used to "step up" or "step down" the voltage for an alternating current

The alternating current in the primary coil produces a changing magnetic field which transmits through the core into the secondary coil

The changing magnetic field in the secondary coil produces an alternating current at the same frequency as the current in the primary coil

Practice A: Describing how a transformer works

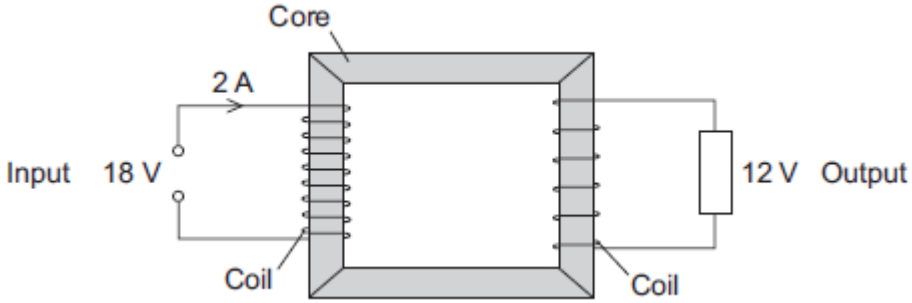

(1) Describe the difference between a.c. and d.c supply

(2) If the input voltage to the primary coil was provided by a battery, explain why the transformer would not give an output voltage

(3) If the 18V supply was a.c., what would happen to the output voltage if the input frequency was doubled?

Assessment A: Describing how a transformer works

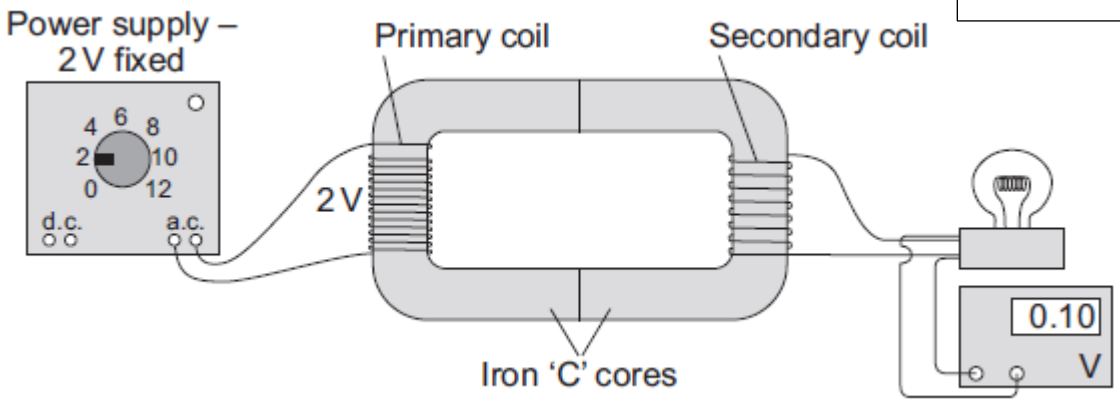

(1) In the diagram, explain what happens to the magnetic field in the primary coil as the a.c. changes through a single cycle; state what happens to the strength and direction of the magnetic field

(2) What is the purpose of the iron core between the primary coil and the secondary coil

(3) Describe how the magnetic field induces a current in the secondary coil

(4) What does the strength and frequency of the current induced in the secondary coil depend upon and why

(5) The wires of the primary and secondary circuits are insulated – why?

Objective B: Explaining what is meant by step up and step down transformers

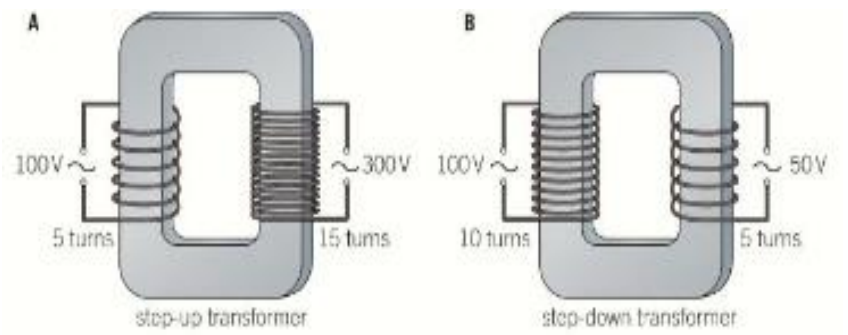

The Transformer Equation:

$$V_P/V_S = N_P/N_S$$

Worked Example:

1. Look at the diagram on the left – verify that the transformer equation is satisfied in each case.

2. State which is a "step-up" transformer and which is a "step-down" transformer.

If we know the current in the primary coil, how can we calculate the current in the secondary coil?

If the amplitude of the current in the primary coil is 10A and the transformer is 100% efficient, what is the amplitude of the current in the secondary coil?

Practice B: Explaining what is meant by step up and step down transformers

1. Calculate the numbers to complete these statements on transformers:

- The primary coil has 100 turns and the secondary coil has 2000 turns. The input voltage is 12 V, the output voltage is _____ V ; this is a step ____ transformer
- A transformer steps up the voltage from 275 kV to 400 kV. The primary coil has 50 turns, the secondary coil has _____ turns.
- A transformer steps the voltage down from 230 V to 12 V. The primary coil has 800 turns, the secondary coil has _____ turns.

2 Decide which of these statements about transformers are **true** and which are **false**.

- The iron core magnifies the magnetic field.
- Transformers need a changing magnetic field to work.
- The output from a transformer is always a.c.
- Transformers can work with a d.c. input p.d.
- There is an electric circuit connecting the primary and secondary coils.
- An iron core is used because it is a good conductor of electricity.

3 Choose the correct words to complete the paragraph.

an a.c; current; National Grid; secondary; Step-down; National Network; potential difference; primary; Step-up; a d.c.; primary

A transformer is used to change the size of a_____. A transformer will only work with _____input. _____ transformers increase the potential difference. For example, they are used to increase the potential difference from power stations onto the _____ . The potential difference will increase when the number of turns on the _____ coil is greater than the number of turns on the _____ coil.

Assessment B: Explaining what is meant by step up and step down transformers

1. The diagram shows a transformer with a 50 Hz (a.c.) supply connected to 10 turns of insulated wire wrapped around one side of the iron core. A voltmeter is connected to 5 turns wrapped around the other side of the iron core. What type of transformer is show?

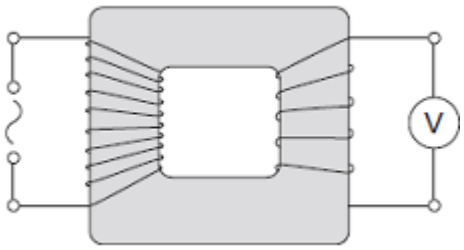

p.d. of the supply in volts	Voltmeter reading in volts
6.4	3.2
3.2	
	6.4

2. The table above shows some of the values for the potential difference (p.d.) of the supply and the voltmeter reading; complete the blanks in the table.

Current in the primary circuit(A)	Current in the secondary circuit (A)
5	
8	
	15

3. Assuming the transformer is 100% efficient, fill in the blanks in this second table on the left

(1) Will the transformer be 100% efficient in practice? Give a reason for your answer.

(2) How will this change the voltages and currents that you have calculated in practice?

Objective C: Applying the transformer equation to practical situations

The diagram shows how transformers are used to change potential differences from power stations to homes

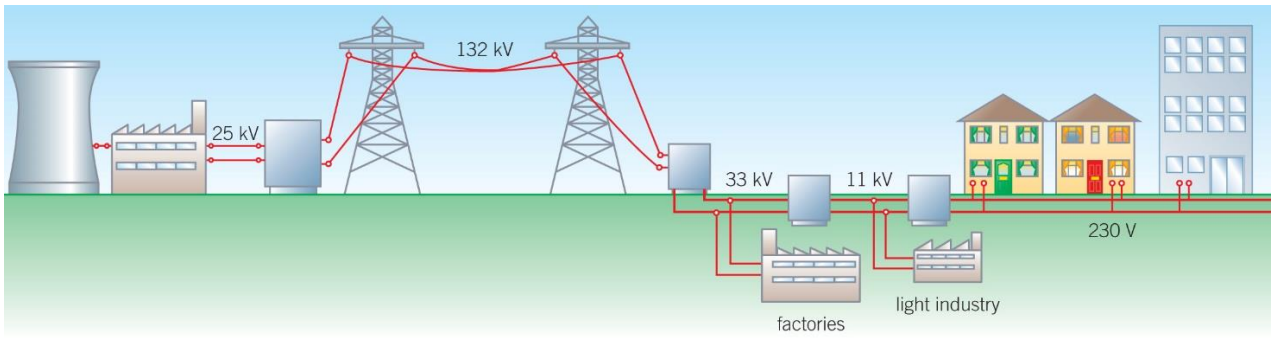

Practice C: Applying the transformer equation to practical situations

Which of the following statements are **true**?

Factories need a higher potential difference than homes.
Only step-down transformers are shown in this diagram.
Homes use electricity at 33 000 V.
The transformers are shown as grey boxes in the diagram.
No transformer is needed to increase the power station potential difference to 132 000 V.
The power station produces electricity at 25 000 V.

Assessment C: Applying the transformer equation to practical situations

1. The diagram shows the internal battery of an electric toothbrush being charged up

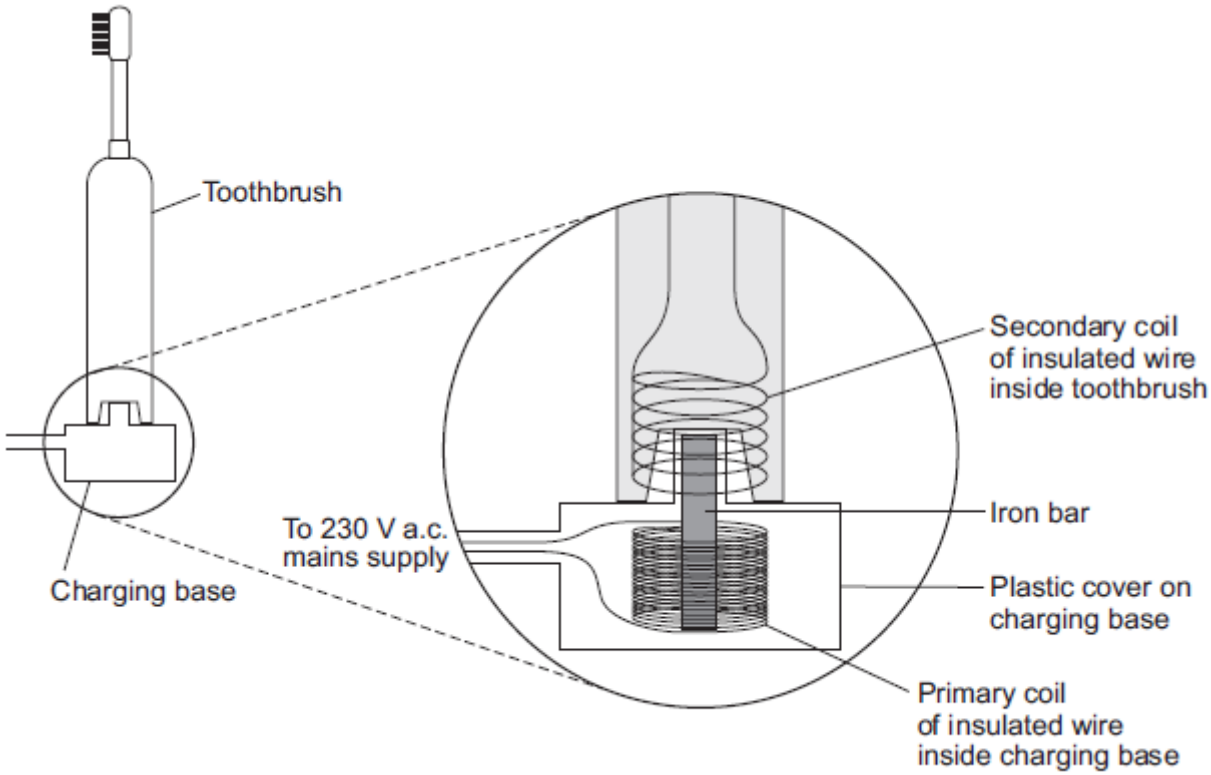

When the toothbrush is being charged, the p.d. across the primary coil in the charging base is 230 V and the charging p.d. across the secondary coil in the toothbrush is 7.2 V. If the primary coil in the charging base has 575 turns of wire on its coil, calculate the number of turns on the secondary coil inside the toothbrush

2. In the National Grid, very large step-up transformers link power stations to the transmission cables. A transformer used for this purpose has 800 turns on its primary coil and 12 800 turns on its secondary coil. The p.d. (potential difference) across its primary coil is 25 kV. What is the p.d. across the secondary coil?

If the current in the secondary coil is 300A, what is the current in the primary coil, assuming the transformer is 100% efficient?

3. Isolating transformers do not change the voltage of a power supply – they are used in devices such as electric shaver sockets. What is their purpose?

Tutorial 3: Plenary

Rearrange the following statements into the correct order:

1. When the alternating current in the primary coil decreases, the strength of the magnetic field decreases.
2. This induced magnetic field has the same effect on the secondary coils as moving a magnet into them would have, creating a voltage in the secondary coil which causes a current to flow.
3. The primary coil is fed by an alternating voltage which creates an alternating current.
4. The iron core is laminated so that internal currents are not induced within it, which would otherwise reduce the efficiency of the transformer.
5. The effect of the changing magnetic field, created by the primary coil, on the secondary coil is the same as moving a magnet into and out of the secondary coil.
6. As the current in the primary coil increases, it induces a magnetic field; the magnetic field induced increases in strength as the alternating current increases.
7. A transformer consists of two coils of wire wound around a soft iron core.
8. An alternating current in the primary coil therefore creates an alternating current of the same frequency in the secondary coil.

TUTORIAL 4: OCR P4.2: Common Uses of Electromagnets

Keywords: permanent and electromagnets, microphones, loudspeakers, electromagnets in common appliances

Objectives this tutorial:

A. Explaining the versatility of electromagnets and how they are used
B. Explaining how microphones and loudspeakers work

Starter: (1) List as many ways as you can in which electromagnets are used; (2) what are the features of electromagnets which make them so useful in practice?

Objective A: Explaining the versatility of electromagnets and how they are used

Figure 1

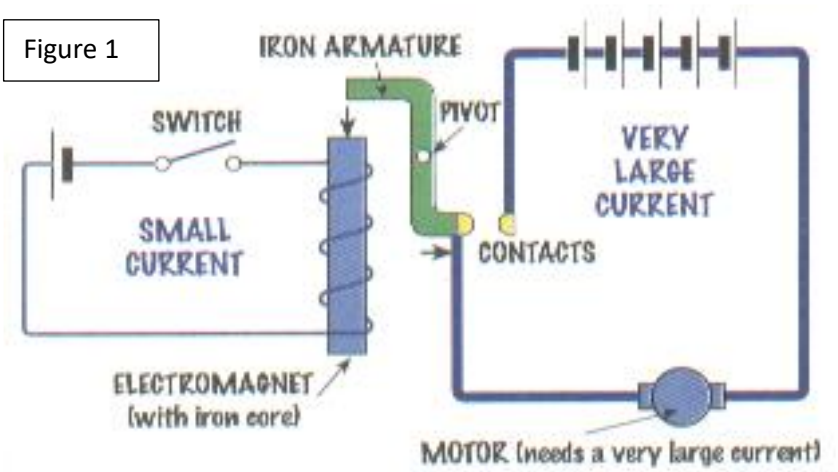

Figure 2

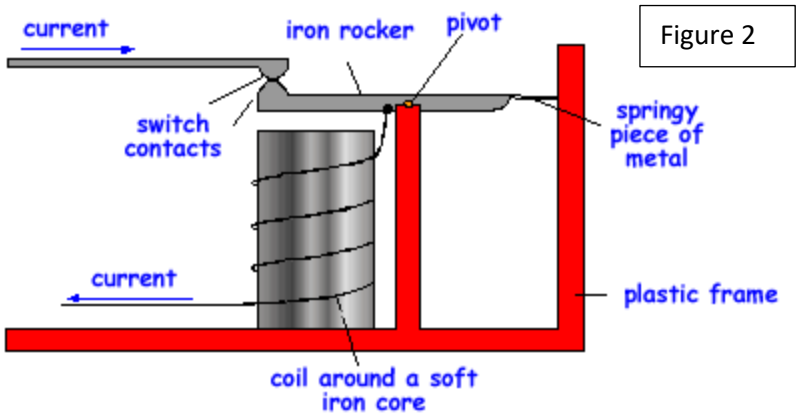

Figures 1 and 2 show two commonly used appliances in domestic and industrial applications. The first is a relay circuit whilst the second is a trip switch fuse.

Explain the purpose of each device and how the action of the electromagnet is crucial to how it works:

In the relay circuit, what stops current leaking from one half of the circuit into the other when the switch is turned on?

In the trip fuse, what advantages does it have over the old fashioned type used in switch boards – a wire that burnt out if the current exceeded a threshold value?

Worked Example A: Explaining the versatility of electromagnets and how they are used

Devise a circuit, using a single electromagnet, which will act as an electric bell

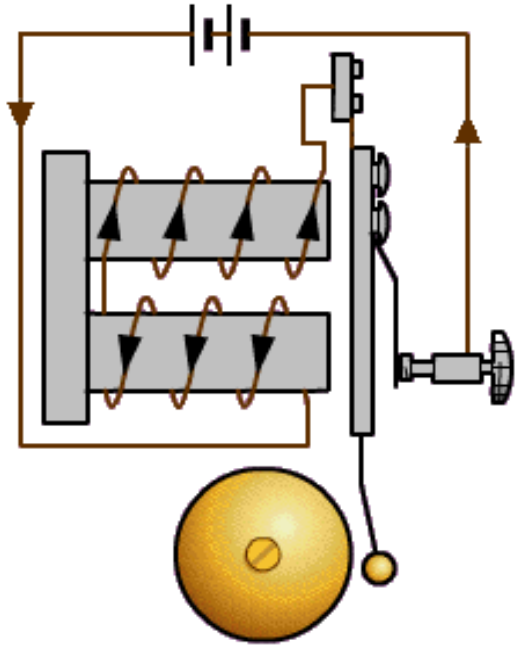

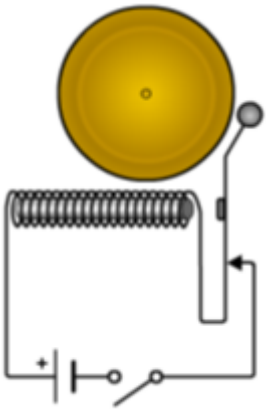

Assessment A: Explaining the versatility of electromagnets and how they are used

Domestic fuse boxes in the home used to comprise a circuit breaker made of a length of copper wire of a specific thickness; the bigger the current that the circuit it was part of was designed to allow, the thicker the copper wire making up the fuse would be.

Go on line to determine how these old fashioned fuses used to work and then compare and contrast its performance with the circuit breaker or trip fuse described under "Objective A".

Objective B: Explaining how microphones and loudspeakers work

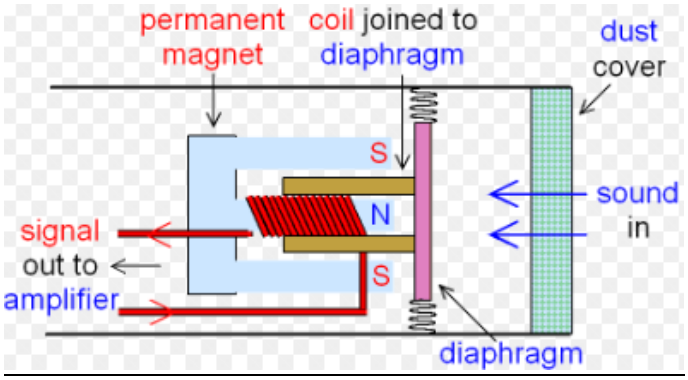

Sound waves on the diaphragm cause it to vibrate back and forth in synchrony with the vibrations of the sound.

This causes the coil of conducting wire to vibrate back and forth in a magnetic field.

What happens in the conducting wire as a result of this?

How is the shape of the signal generated related to the sound waves which caused the diaphragm to vibrate? Explain why.

Worked Example B: Explaining how microphones and loudspeakers work

Devise a circuit which uses an electromagnet to create a loudspeaker with input signal generated by the microphone.

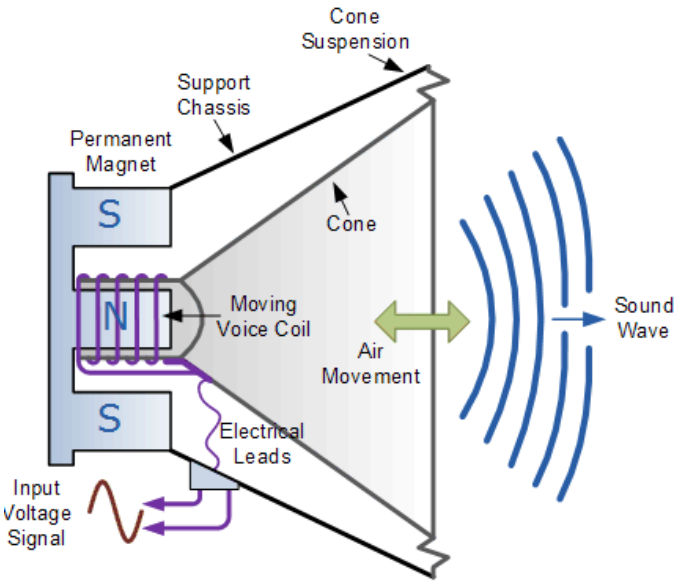

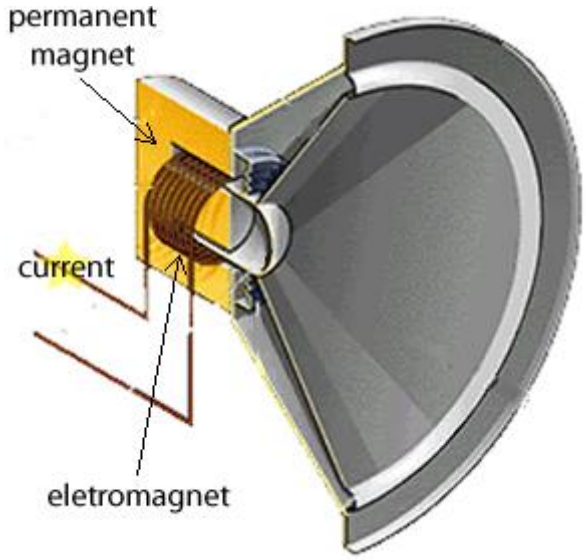

A coil of wire is positioned in the gap between the north and south poles of the cylindrical magnet.

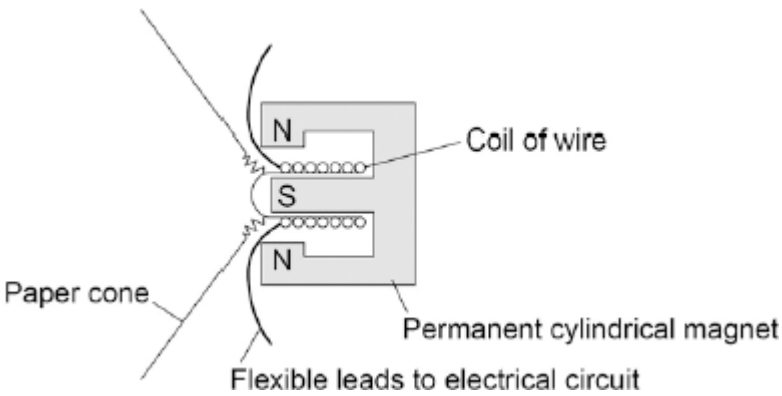

Explain how the loudspeaker converts current in an electrical circuit to a sound wave.

Assessment B: Explaining how microphones and loudspeakers work

Write a narrative of how a microphone and loudspeaker are used to convert sound waves in the air into an electrical signal which is then transmitted to a loudspeaker to convert the signal back into sound waves.

Modern microphones are wireless; explain the mechanisms used which enable wireless microphones to work.

Use appropriate and clear English when you set out your response.

Tutorial 4: Plenary

In what way do you think electromagnets might be used to help reduce global warming; is there evidence that this is already happening? What else does it depend upon for these applications to be truly beneficial towards global warming?

Notes

Notes

Notes

UNI PATHWAYS

UNI PATHWAYS

thebrilliantclub.org