Where did my packets go?

Key Stage 4 Programme

Pupil Name	Name
Handbook Designed by	Ibukun Akinyemi

Timetable and Assignment Submission

Timetable – Tutorials

Tutorial	Date	Time	Location
1			
2			
3			
4			
5			
6 (Feedback)			

Timetable – Homework Assignments

Homework Assignment	Description	Due Date
Tutorial 1		
Tutorial 2		
Tutorial 3		
Tutorial 4		
Tutorial 5		

Assignment Submission – Lateness and Plagiarism

Lateness	
Submission after midnight on 19 July	10 marks deducted
Plagiarism	
Some plagiarism	10 marks deducted
Moderate plagiarism	20 marks deducted
Extreme plagiarism	Automatic fail

The Brilliant Club KS4 Programme – Pupil Feedback Report

Grade	Marks	What this means
1st	70+	Performing to an excellent standard at A-level
2:1	60-69	Performing to a good standard at AS-level
2:2	50-59	Performing to an excellent standard at GCSE
3rd	40-49	Performing to a good standard at GCSE
Working towards a pass	0-39	Performing below a good standard at GCSE
Did not submit	DNS	No assignment received by The Brilliant Club

Lateness	
Any lateness	10 marks deducted
Plagiarism	
Some plagiarism	10 marks deducted
Moderate plagiarism	20 marks deducted
Extreme plagiarism	Automatic fail

Contents

Course Rationale	P5
Mark Scheme	P6
Glossary of Keywords	P9
Tutorial 1	P10
Tutorial 2	P15
Tutorial 3	P23
Tutorial 4	P30
Tutorial 5	P34
Tutorial 6	P38
Reflection on feedback	P39
Appendices	P40
Referencing correctly	P40

Course Rationale

The idea of this course is to get the students familiar with the processes involved in computer network transmission, with particular emphasis on wireless networks. It offers both theoretical knowledge of how a wireless network functions and practical understanding of some of the performance metrics used on a wireless network and implication of changing network scenarios. At the end of this set of tutorials, the student should be able to understand and reasonable talk about:

- Carry out decimal to binary conversions
- Different types of wireless networks
- OSI/ TCP/IP layers
- Network protocols and what they are
- Function of the Network Layer
- Function of the MAC layer
- Channel Access
- Quality of Service and performance metrics

Although the contents of this module seems quite technical, this was intentionally done in order to challenge the students analytical skill and thinking process.

Each tutorial should run for an average of one hour with assignments that tests understanding of what was taught in the tutorial.

Grades and final score will be based on the final assessment at the end of the fifth tutorial.

Mark Scheme Table

	Skills	1st (70-100)	2:1 (60-69)	2:2 (50-59)
Subject knowledge	Knowledge and Understanding	• All content included is relevant to the general topic and to the specific question/title • Good understanding of all the relevant topics. • Scientific terms are defined and used accurately throughout • Clear justification on how the content included is related to the specific issues that are the focus of the assignment	• Most of the content included is relevant to the general topic and to the specific question/title • Good understanding of most the relevant topics • Scientific terms are used accurately but not always clearly defined. • Adequate justification on how the content included is related to the specific issues that are the focus of the assignment	• Some of the content included is relevant to the general topic and to the specific question/title • Good understanding on some of the relevant topics but occasional confusion on others. • Scientific terms are used mostly accurately with occasional confusion and often not defined. • Some justification on how the content included is related to the specific issues that are the focus of the assignment
Critical Thinking	Research and Evidence	• Inclusion of rich sources of research findings, data, quotations or other sourced material as evidence for the claims/ ideas • Use evidence/ calculations to support claims/assertions/ ideas, consistently clearly and convincingly • Evidence of further reading beyond materials provided which were used in an appropriate context • Data is effectively analysed and appropriate assumptions/ conclusions are reached	• Inclusion of adequate sources of research findings, data, quotations or other sourced material as evidence for the claims/ ideas • Use evidence/calculations to support claims/assertions/ideas, mostly clearly and convincingly • Evidence of further reading beyond materials provided • Data is analysed and the assumptions/conclusions that are reached are mostly appropriate	• Inclusion of some sources of research findings, data, quotations or other sourced material as evidence for the claims/ ideas • Use evidence/ calculations to support claims/assertions/ ideas, at times clearly and convincingly • Limited evidence of further reading beyond materials provided • There is an attempt to analyse data is and draw assumptions/ conclusions

Critical Thinking	Developing an Argument	• A point of view or position in relation to the title or question is consistently clear • Argument/proof exceptionally well-developed and well-justified • A position is clearly established in relation to the question, and is developed effectively and consistently throughout the essay • Makes links effectively between subjects that have not previously been associated • Uses concepts from the tutorials in an unfamiliar context, and does so accurately and confidently. • Content is analysed effectively to support the argument	• A point of view or position in relation to the title or question is adequately clear • Argument/proof clear and well-developed and position justified • A position is established in relation to the question, and is well-developed in most of the essay • Some evidence of linking subjects that have not previously been associated • Use some concepts from the tutorials in an unfamiliar context, but not always accurate • Analysis of content to support the argument	• A point of view or position in relation to the title or question is somewhat clear • Argument/proof clear but not well-developed • A position is established in relation to the question, and is well-developed in parts of the essay • Limited evidence of linking subjects that have not previously been associated • Limited use of concepts from the tutorials in other contexts • Some analysis of content to support the argument
	Critical Evaluation	• Moved beyond description to an assessment of the value or significance of what is described • Evaluative points are consistently explicit/ systematic/reasoned/ justified • Effective critiques on the reliability of sources provided	• Mostly description but some assessment of the value or significance of what is described • Evaluative points are mostly explicit/ systematic/reasoned/ justified • Some evidence of critiques on the reliability of sources provided	• Only description with minimal assessment of the value or significance of what is described • Evaluative points are at times explicit/ systematic/reasoned/ justified • Limited evidence of critiques on the reliability of sources provided

Written Communication	Structure and Presentation	• Ideas are presented in paragraphs and arranged in a logical structure that is appropriate for the assignment • The introduction clearly outlines how the essay/ report will deal with the issues • The conclusion summarises all the main points clearly and concisely • All calculations, formulas and methods are clearly structured, clear to follow and correct • Tables and graphs are effectively constructed including appropriate headings, units and scales. • All sources are referenced correctly in	• Ideas are presented in paragraphs and arranged in a structure that is mostly appropriate for the assignment • The introduction adequately describes how the essay/report will deal with the issues • The conclusion summarises most of the main points clearly • Calculations, formulas and methods are mostly structured, clear to follow and correct • Most tables and graphs are well constructed • Most sources are referenced correctly in an agreed format	• Ideas are presented in paragraphs and arranged in a structure • The introduction mentions how the essay/report will deal with the issues • The conclusion summarises some of the main points clearly • Calculations, formulas and methods are not always structured, clear to follow and correct. • Some tables and graphs are well constructed but contains some errors • Some sources are referenced correctly in the agreed format with occasional errors
	Language and Style	• No spelling, grammar or punctuation errors • Units and significant figures are presented accurately throughout • Writing style consistently clear, appropriate for scientific documents and easy to follow • Accurate and consistent use of technical language and vocabulary	• Minimal spelling, grammar or punctuation errors • Units and significant figures are presented accurately throughout • Writing style mostly clear, appropriate for scientific documents and easy to follow • Some attempts of using technical language and vocab alary, but not always accurate	• Some spelling, grammar or punctuation errors • Units and significant figures are presented accurately throughout with occasional errors • Writing style moderately clear, appropriate for scientific documents and easy to follow • Use of simple language and vocabulary effectively but struggles to use technical language

Glossary of Keywords

Acronym	Definition	Comments
ICT		
WLAN		
AP		
OSI		
LAN		
SSID		
IP		
TCP		
MAC		
PHY		
DHCP		
IEEE		
CSMA/CA		

Tutorial 1 – Title

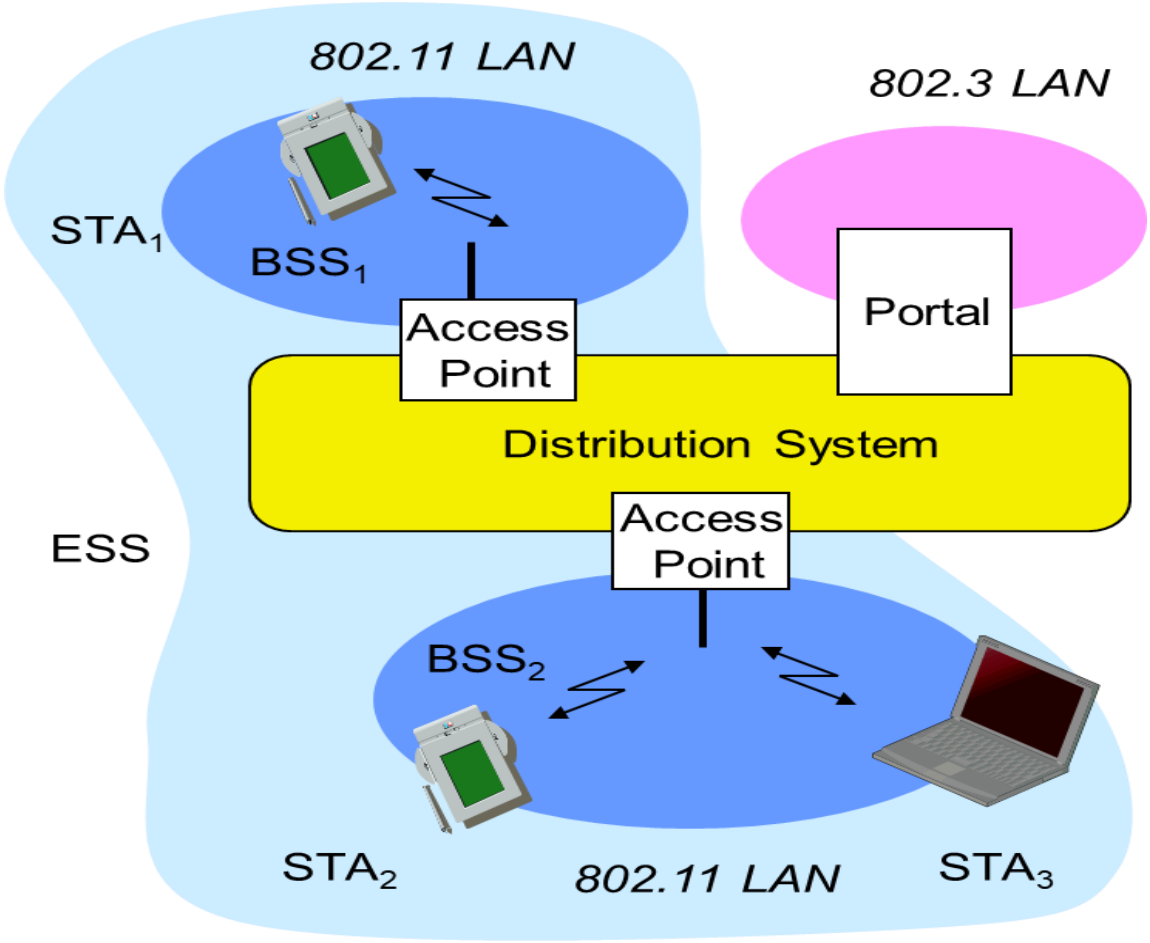

What is the Purpose of Tutorial 1?

- Build on previous ICT knowledge
- Understand concept particular to wireless networking and WLAN protocols
- WLAN problems— Hidden nodes and Exposed nodes
- Procedure of association with AP

Note: Students are expected to fill in meaning of acronyms

What is a WLAN?

There are two types of IEEE 802.11 wireless networks—Adhoc and Infrastructure wireless network

Ad-hoc WLAN:

Features:

Decentralised— no AP and nodes are just connected to each other wirelessly, self configuring, easily put together and pulled down.

Infrastructure WLAN:

Features:

Centralised— has a base station or access point that manages the network. All nodes have to associate with the base station in order to be a member of the network and communicate on the WLAN

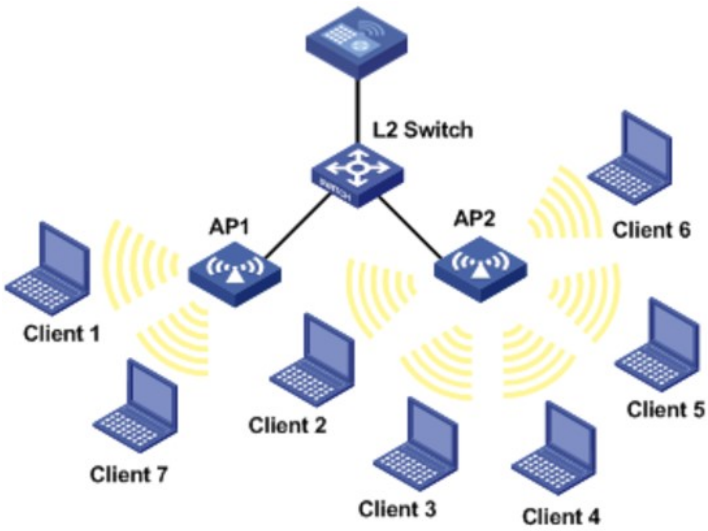

WLAN Problems: Hidden node and Exposed node problem

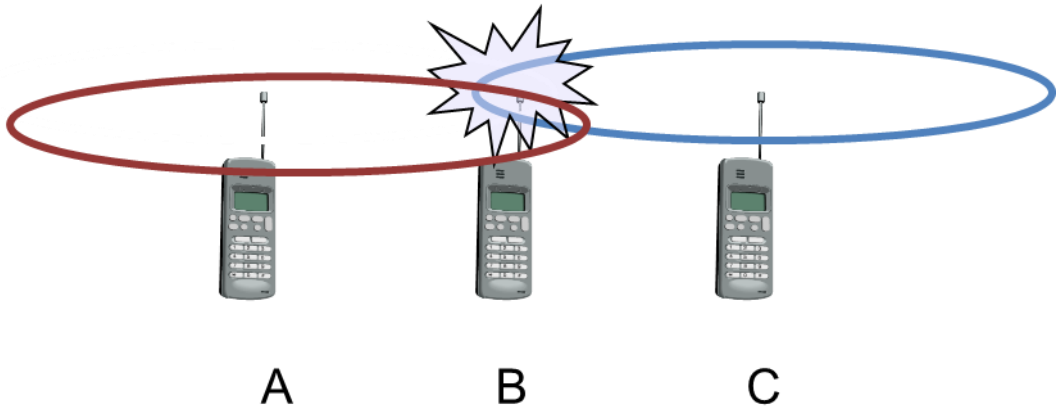

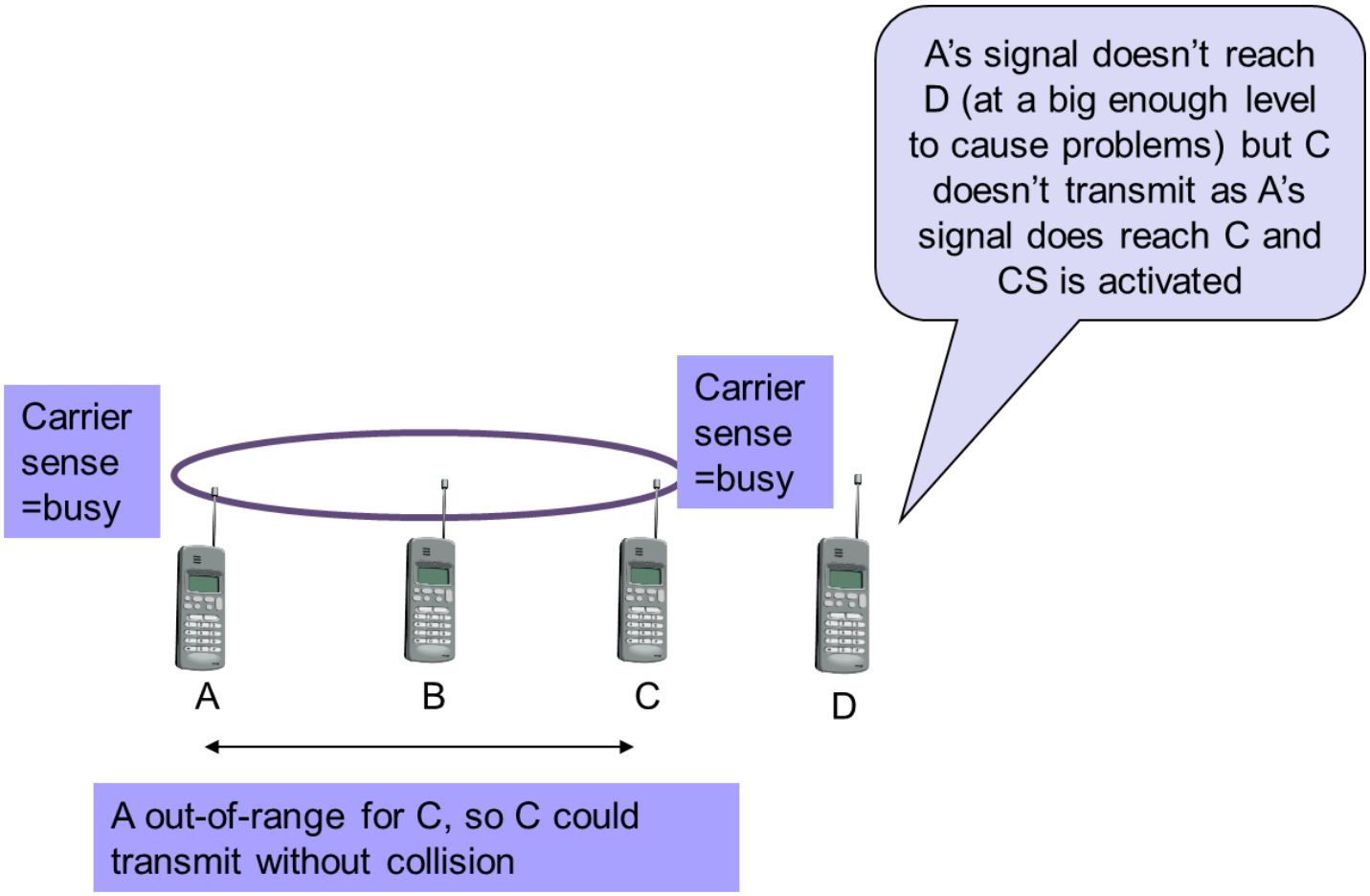

AP Association: How do computers become members of an Infrastructure WLAN?

Before a computer can begin to transmit or send data across a network, it has to be a member of the network. The first thing that happens is that the wireless LAN card scans around for surrounding networks by sending a probe request which is a broadcast and all APs around it will get the probe request. Each network is represented by its AP and has an ID (SSID). The AP sends a probe response and the computer acknowledges receipt of the probe response frame.

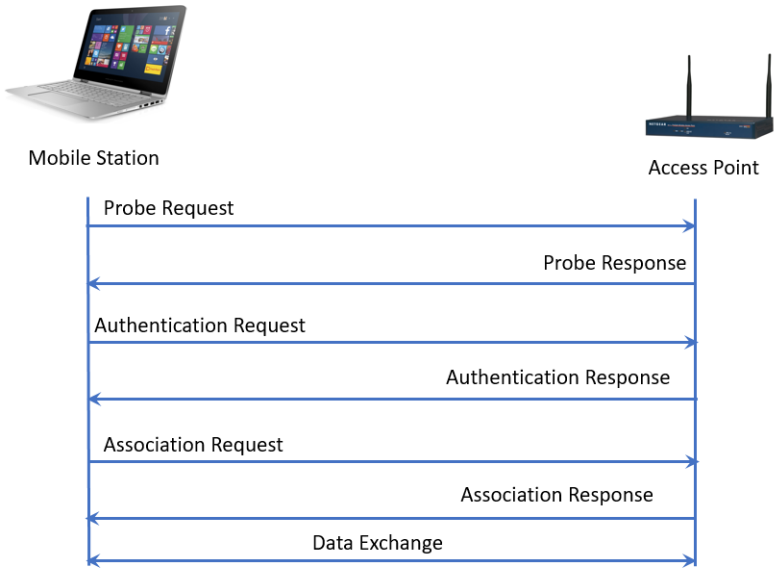

The next step is the Authentication step. The node requests authentication from the AP, the AP responds and then the node Associated with the AP. Association is the final stage where security and bit rate options are finalized and a communication link is established between the node and the AP.

Tutorial 1– Baseline Test

1. List different types of wireless networks you know?

2. Can you identify the similarities and differences between the wireless networks listed in question 1?

3. Explain the following terms in the context of an IEEE 802.11 wireless LAN:

- Wireless Access Point
- Infrastructure network architecture
- Adhoc network architecture
- Hidden Node
- Exposed Node

Tutorial 2– OSI layer and TCP/IP Stack

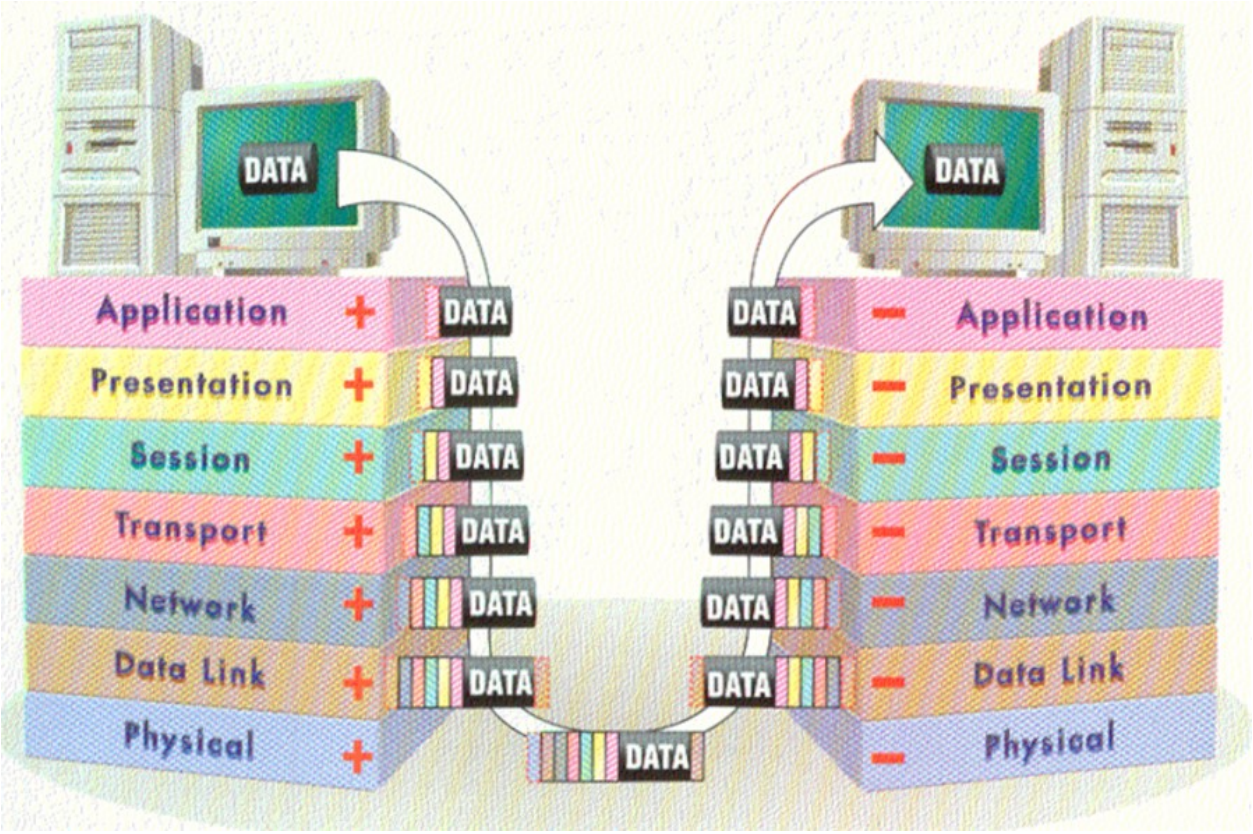

What is the Purpose of Tutorial 2?

- Understand the OSI and TCP/IP layering system and their functions
- Understand where wireless communication functions are implemented on the OSI layering system

OSI	TCP/IP
7. Application	Applications
6. Presentation	
5. Session	
4. Transport	TCP (host-to-host)
3. Network	IP
2. Data Link	Network Access
1. Physical	

Data transmission happens when packet are sent between networks and for the different networks to transmit, there must be an agreement on the set of transmission rules. These rules are called protocols. Each layer has its own set of protocols.

Network/IP layer Functions

The network layer is responsible for routing the data or packet through the internetwork. In order to carry out this function, each device must have a unique means of identification on the network.

IP addressing

What is an IP address?

An IP address is the Internet Protocol identifier for a network device or hardware on a network. It is functional on the Network Layer of the OSI Model. IP addresses allow communication and routing across IP networks.

There are 2 versions of IP addresses— IP version 4 (IPv4) and IP version 6 (IPv6)

IPv4 consists of a set of 4 decimal numbers separated by a dot

IPv6 consists of a set of 8 groups of 4 hexadecimal numbers separated by a colon

IP address format:

IP addresses consists of 3 sections, i.e. the network portion, the host portion and the subnet mask.

IPv4 address format —10.1.23.19/8

IPv6 address format — 2001:0db8:0000:0042:0000:8a2e:0370:7334 /64

IP addresses can be assigned to devices on a network either manually or with the use of a DHCP protocol.

Assigning IPv4 addresses

To understand how IPv4 addresses are assigned, you need to understand some terminologies and their functions. You also have to understand binary numbering system and how decimals are converted to binary forms and vice versa.

Subnet:

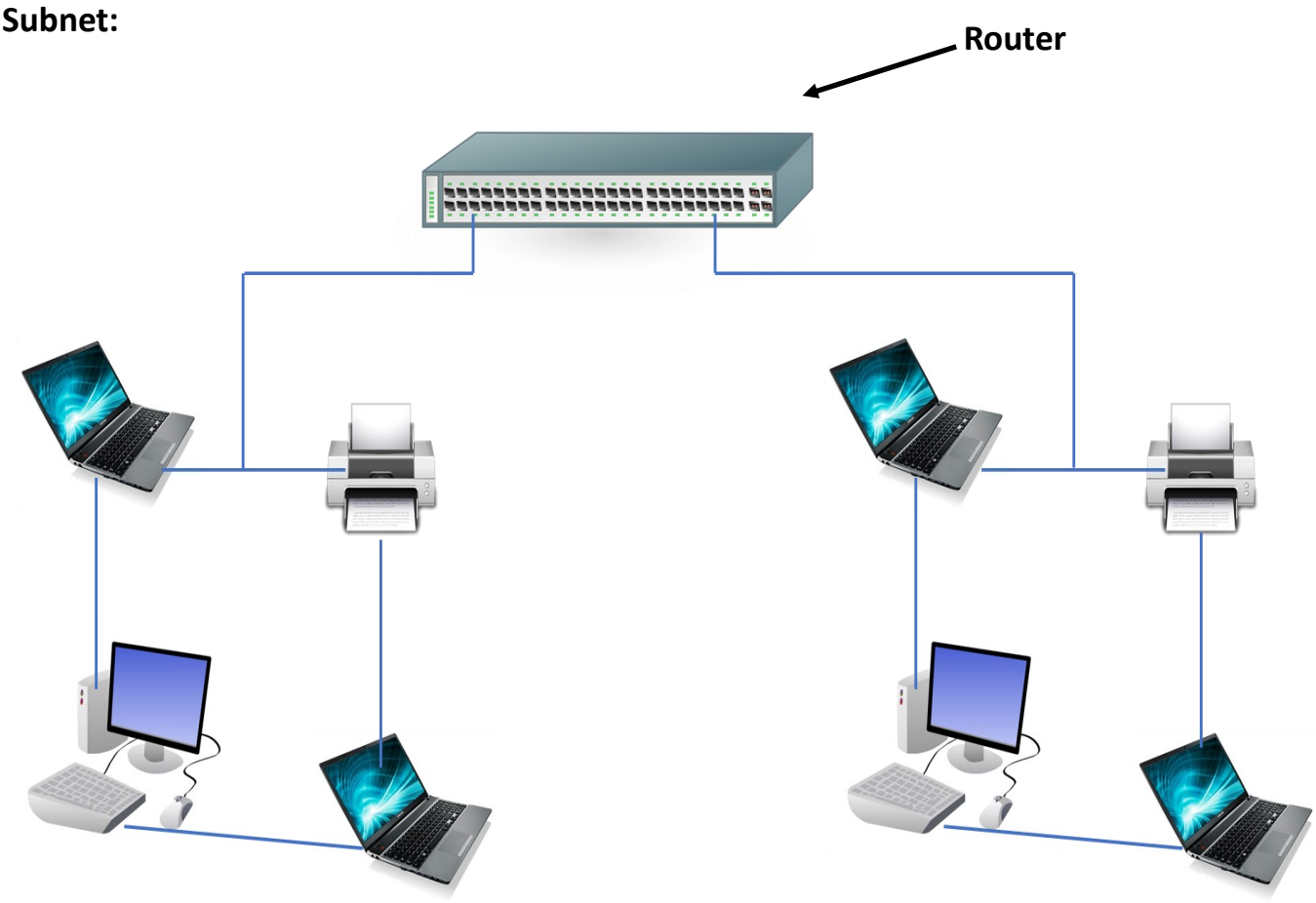

An IPv4 address is a set of 32 binary bits divided into four octets and each octet is separated by a dot. The value in each octet ranges from 00000000 to 11111111 and the different combinations in-between.

The decimal equivalent of the range is 0 to 255.

Types of IPv4 address are:

- Private address: 10.0.0.1 to 10.255.255.255

  172.16.0.1 to 172.31.255.254

  192.168.0.1 to 192.168.255.254

- Public address

How to convert the binary value in an octet to decimal:

Converting the 11111111 to decimal

Bit position:	7	6	5	4	3	2	1	0	
Binary value:	1	1	1	1	1	1	1	1	
Decimal equivalent	2^7	2^6	2^5	2^4	2^3	2^2	2^1	2^0	
	128	64	32	16	8	4	2	1	= 128 + 64 + 32 + 16 + 8 + 4 + 2 + 1 = 255

Example:	10	.	1	.	23	.	19		(decimal)
	00001010	.	00000001	.	00010111	.	00010011		(binary)

The allocation of IP addresses is very important because it has to be allocated based on the network setup while ensuring that addresses are not duplicated. Each address has a network portion, the host portion and the subnet mask. The subnet mask shows us how many bits represents the network part of the address as shown below:

IP address: $\underbrace{10}_{\text{Network ID}} . \underbrace{1 . 23 . 19}_{\text{Host ID}} / \underbrace{8}_{\text{Subnet mask}}$

Alternative format is

IP address:	10	.	1	.	23	.	19
Network mask:	255	.	0	.	0	.	0

$\underbrace{11111111}_{\text{Network part}} . \underbrace{00000000 . 00000000 . 00000000}_{\text{Host ID}}$

Subnetting

Most of the time, it is necessary to break a large network down into smaller sub-networks. This is called subnetting and your large IP address has to be divided into sub-network chunks before hosts are given their individual network addresses based on the subnet they are grouped into.

Example: If you have a network address 204.17.5.0 with net mask 255.255.255.0, we can see that the Network ID is 204.17.5 because of the 255.255.255 portion of the mask. The last octet is used for the host ID and we can get 255 host addresses from it.

What happens if your design is for 3 networks with maximum number of nodes being 14?

Tutorial 2 assignment

You are an ISP with a 8.0.0.0/8 block of network address. You have to create 3 networks with at least 14 computers and 2 networks with at least 18 computers. What network address range will you assign to the different networks? Show each step undertaken in deriving this?

Tutorial 3 – The MAC Layer

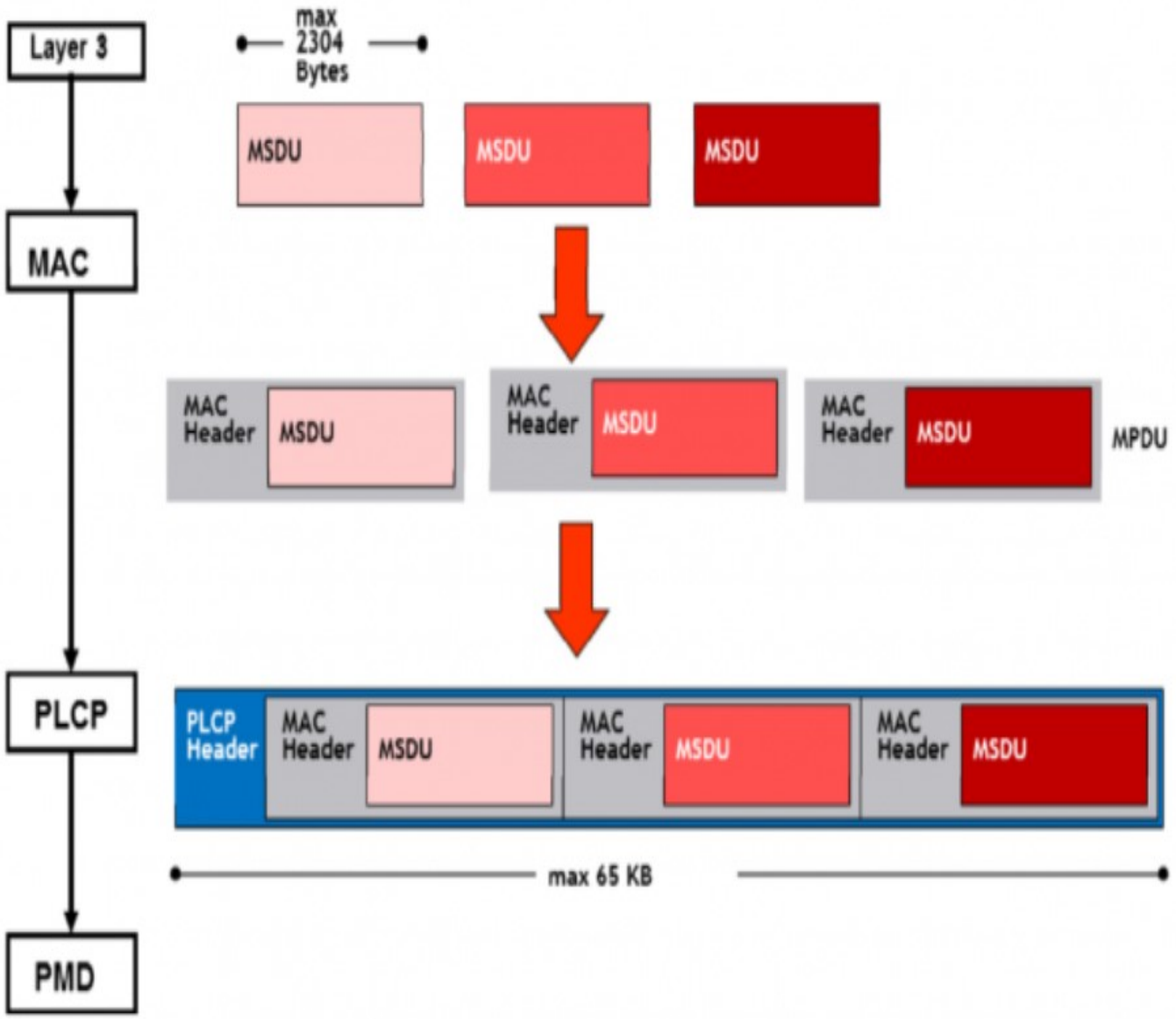

What is the Purpose of Tutorial 3?

- Understand MAC layer, headers and functions
- MAC layer protocols and channel access

MAC Layer Functions

One of the functions of the MAC layer is medium access. It controls the process which enables the different devices on the network to share available air time. For wireless networks, the medium access mechanism is the CSMA/CA. There are also different types of frames that allow smooth operation at the MAC Layer.

Types of MAC Frame

Management Frame—Association request, Association response, Beacon, Probe request, Probe response, Authentication

Control frame—Request to Send, Clear to Send, Acknowledgment

Data Frame

Frame Format

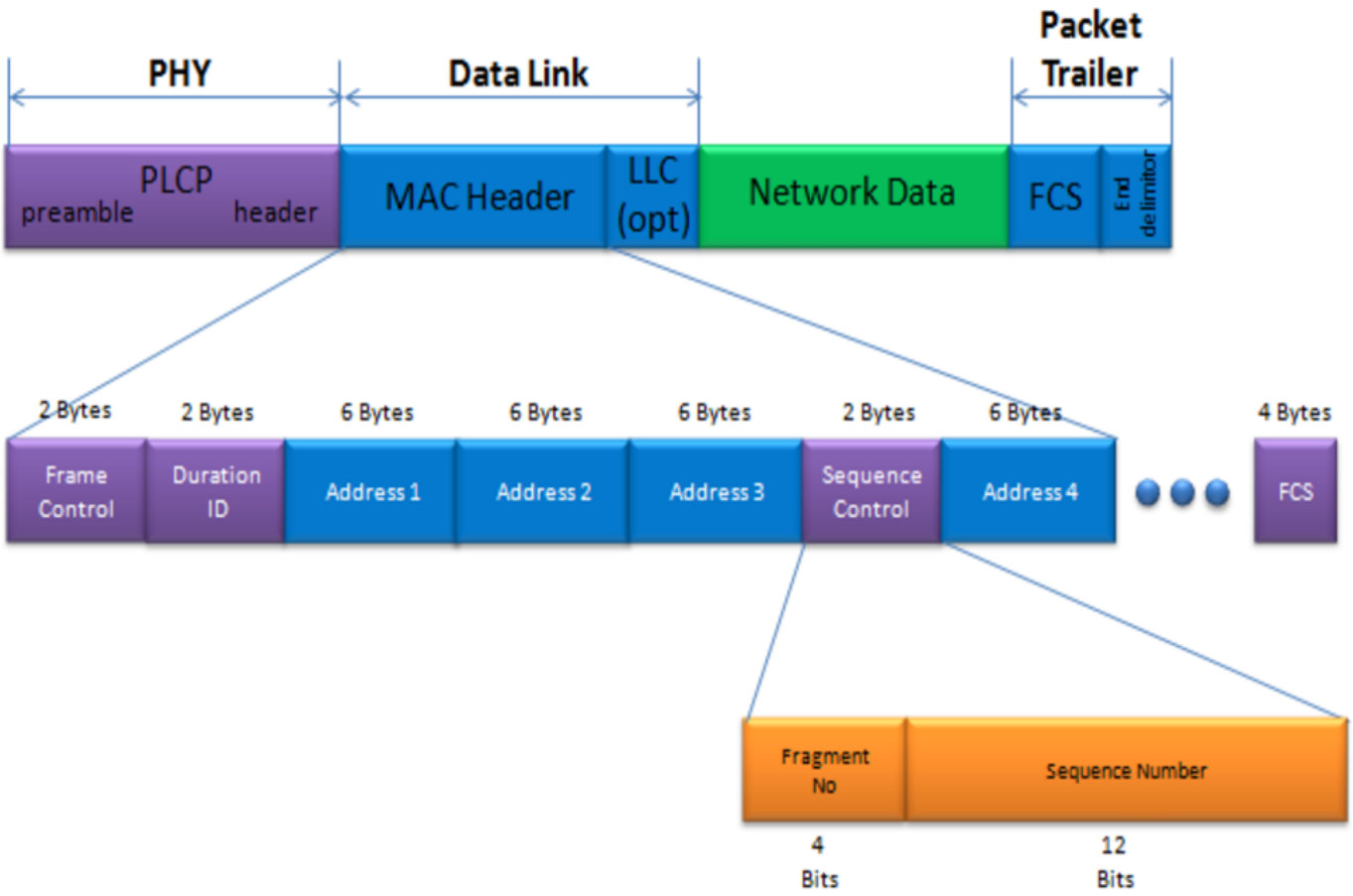

Frame Control: Indicates the type of frame and provides control information

Duration ID: Indicates time in microseconds that the wireless channel will be busy with the transmission of a MAC frame

Addresses: This stores the transmitter address, the receiver address, the source and destination addresses.

Sequence Control:

Frame Check Sequence:

IEEE 802.11 MAC layer Channel Access Procedure

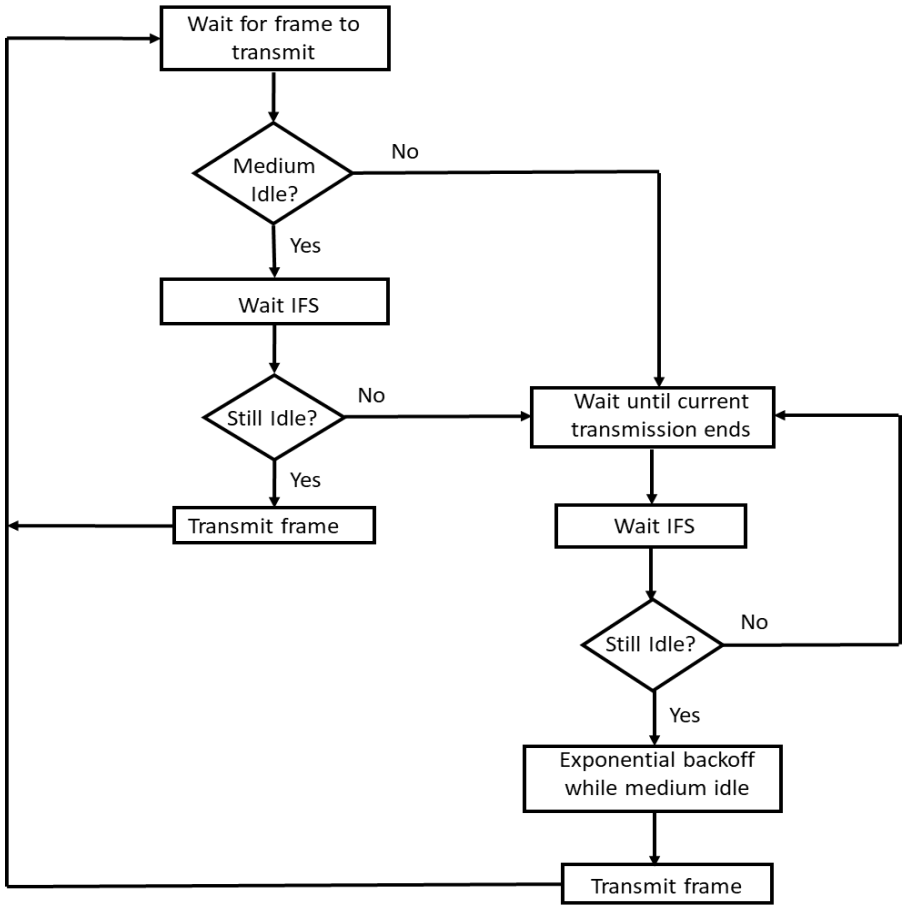

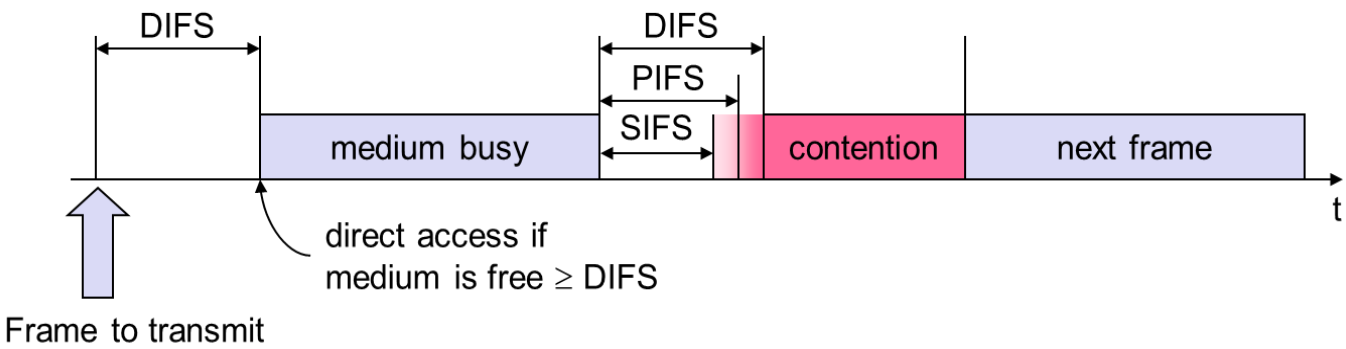

Channel Access

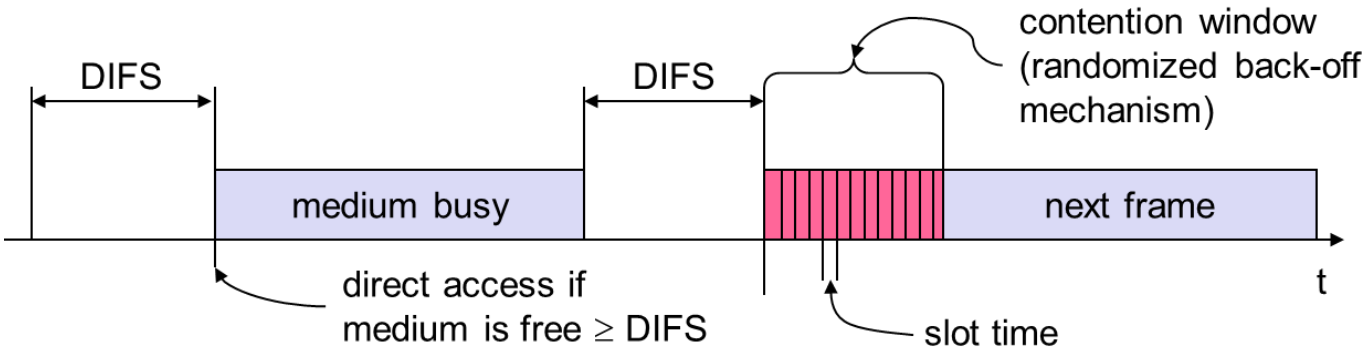

Channel access with multiple stations

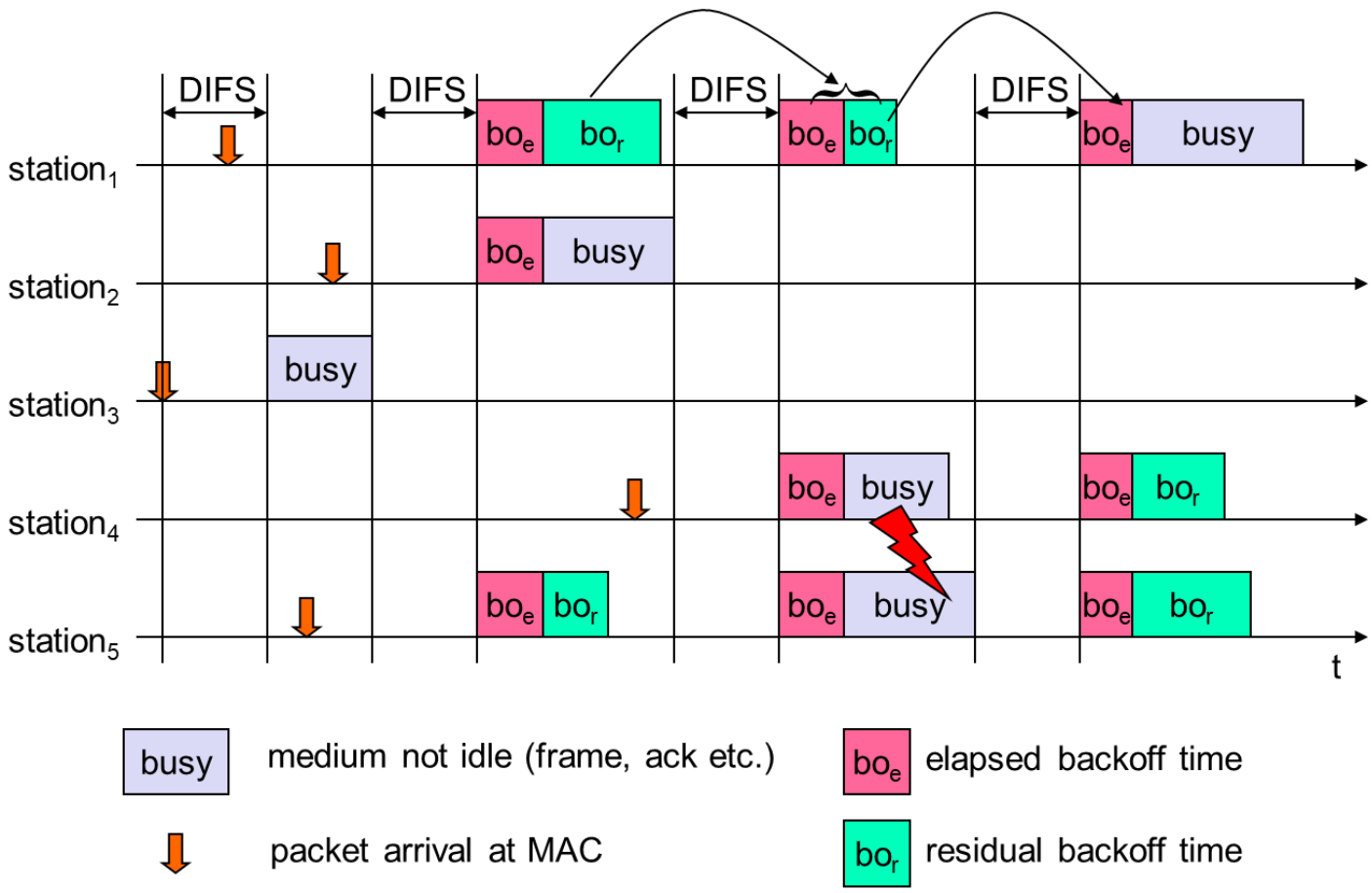

Tutorial 3 assignment

Think about the contention window aspect of wireless network channel access and in at least 600 words, describe the possible effect of varying this value or keeping it fixed in relation to number of transmitting devices on the network.

Tutorial 4 – Quality of Service

What is the Purpose of Tutorial 4?

- Know the types of WLAN traffic, and why QoS is important
- Understand Quality of Service on a wireless network
- Introduction to how to use PCATTCP to demonstrate network performance under varying load and technologies (Practical Class)

Network traffic are generally divided into four types called Access Categories (ACs). They are:

AC(VO): Voice

AC(VI): Video

AC(BE): Best Effort

AC(BK): Background

Each of these traffic classes have their QoS requirements that ensures good user experience.

What is QoS? (Discuss)

What QoS metrics are you aware of?

Throughput:

Delay:

Packet loss

Introduction: The aim of this lab is to measure network performance (throughput and delay parameters) of the WLAN we will set up and carry out some network performance analysis.

Package we will use for this performance test is called Printing Communication Association Port of Test Transmission Control Protocol – PCATTCP.

Experiment Steps:

1. Set up a wireless network of 8 computers using the TP-LINK Access Point (AP) provided. IP addresses could be statically configured using the address scheme from tutorial 2. Set the AP to operate at 2.4GHz frequency and 20MHz bandwidth and ensure the indicator on the AP reflects this. Ensure connectivity on the WLAN. (How?)
2. Set one of the Computers as a multithreaded server. This will be the receiving node on the network.
3. Set the remaining computers as transmitters.
4. To start the test, the receiver must be running first so, at command prompt window (cmd) on the receiver machine, change directory to the PCATCCP folder and type the following command: **Pcattcp -M -c** This sets the receiver as a multithreaded server and in continuous listening mode.
5. On the transmitter systems, at command prompt, change directory into the PCATTCP folder and type the following command: **Pcattcp -t -c X.X.X.X** (this is IP address of the multithread server and will set the transmitter to send packets continuously). Here, the transmitter send the de fault size of PCATTCP packet to the receiver and the receiver displays parameters of the network the packet traversed. Note that size and number of packet sent are configurable parameters.
6. With receiver in listening mode, perform steps 5-6 with: 1 computer transmitting, 2 computers transmitting and so on till all the computers set up as transmitters are all transmitting packets to the receiver. Record all outputs shown on the multithread server.
7. Now, set the Access Point to operate at 2.4GHz frequency and 40MHz bandwidth and repeat the test.
8. Save the readings of each test (ensure correct file names)

Tutorial 4 assignment

- What do you understand by Quality of Experience in network browsing?
- Why do you think QoS is essential and what kind of metrics will you use to measure QoS? Give example of applications that require QoS guarantees?

In 200 words, explain how the requirements of carrying voice traffic differ to that of web -browsing.

Tutorial 5 – Running Network Simulations

What is the Purpose of Tutorial 5?

- How to use PCATTCP to demonstrate network performance under varying load and technologies (Practical Class)

Continuation of lab work:

Set the Access Point to operate at 5GHz frequency and 20MHz bandwidth, 5GHz frequency and 40MHz bandwidth and repeat the test in tutorial 4

Final Assignment

The final assignment is in two parts. The first part tests your understanding of key concepts of the wireless network as taught in the tutorials. The second part is a discussion from the lab experiments in tutorial 5.

Part One

I. What is the difference between the Hidden node problem and the Exposed node problem?

II. What are the main differences between the infrastructure WLAN and the Ad-hoc WLAN

IP addresses

I. What are IP addresses and why are they used?

II. What is difference between Public and Private IP addresses?

III. What is difference between IPv4 and IPv6 (with examples)

Quality of Service

I. What is QoS and why do we have to put QoS into consideration ?

II. What wireless protocol is responsible for QoS?

Part Two:

In tutorials 4 and 5, we did some network performance experiments and took some readings. You are required to plot the graph of throughput against number of transmitting nodes and also plot the graph of delay against transmitting node. Discuss your findings giving reasons for any conclusions you arrived at.

Tutorial 6 – Feedback tutorial

What is the Purpose of Tutorial 6?

- To receive feedback on final assignments.
- To share examples of best practice with the other pupils in your group.
- To write targets for improvement in school lessons.

To reflect on the programme including what was enjoyed and what was challenging.

Final assignment feedback

What I did well…	What I could have improved on…

My target for future work is…

Reflecting on Uni Pathways

What did you most enjoy about Uni Pathways?

What did you find challenging about the programme?	How did you overcome these challenges?

Appendix 1 – Referencing correctly

When you get to university, you will need to include references in the assignments that you write, so we would like you to start getting into the habit of referencing in your Brilliant Club assignment. This is really important, because it will help you to avoid plagiarism. Plagiarism is when you take someone else's work or ideas and pass them off as your own. Whether plagiarism is deliberate or accidental, the consequences can be severe. In order to avoid losing marks in your final assignment, or even failing, you must be careful to reference your sources correctly.

What is a reference?

A reference is just a note in your assignment which says if you have referred to or been influenced by another source such as book, website or article. For example, if you use the internet to research a particular subject, and you want to include a specific piece of information from this website, you will need to reference it.

Why should I reference?

Referencing is important in your work for the following reasons:

It gives credit to the authors of any sources you have referred to or been influenced by.
It supports the arguments you make in your assignments.
It demonstrates the variety of sources you have used.
It helps to prevent you losing marks, or failing, due to plagiarism.

When should I use a reference?

You should use a reference when you:

Quote directly from another source.
Summarise or rephrase another piece of work.
Include a specific statistic or fact from a source.

How do I reference?

There are a number of different ways of referencing, and these often vary depending on what subject you are studying. The most important to thing is to be consistent. This means that you need to stick to the same system throughout your whole assignment. Here is a basic system of referencing that you can use, which consists of the following two parts:

1. A marker in your assignment: After you have used a reference in your assignment (you have read something and included it in your work as a quote, or re-written it your own words) you should mark this is in your text with a number, e.g. [1]. The next time you use a reference you should use the next number, e.g. [2].

2. Bibliography: This is just a list of the references you have used in your assignment. In the bibliography, you list your references by the numbers you have used, and include as much information as you have about the reference. The list below gives what should be included for different sources.

Websites – Author (if possible), title of the web page, website address, [date you accessed it, in square brackets].

E.g. Dan Snow, 'How did so many soldiers survive the trenches?', http://www.bbc.co.uk/guides/z3kgjxs#zg2dtfr [11 July 2014].

Books – Author, date published, title of book (in italics), pages where the information came from.

E.g. S. Dubner and S. Levitt, (2006) *Freakonomics*, 7-9.

Articles – Author, 'title of the article' (with quotation marks), *where the article comes from* (newspaper, journal etc.), date of the article.

E.g. Maev Kennedy, 'The lights to go out across the UK to mark First World War's centenary', Guardian, 10 July 2014.

Appendix 2 – Using the VLE

VLE username	
VLE password	

Please remember the following key details:

You are able log into the VLE either through the link on our website (**www.thebrilliantclub.org**) or going directly to the VLE site at (https://portal.thebrilliantclub.org/sign-in).

- Please update your profile with your full name and email address- this will allow you to retrieve forgotten passwords or usernames

If you forget your log-in details you can request them to be emailed to you by clicking the link on the VLE home page. (If you are still having problems you can email: **schools@thebrilliantclub.org**)

What is the VLE?

The VLE is a virtual learning environment for all pupils on Uni Pathways it is used for:

messaging your tutor

submitting homework

submitting your final assignment

accessing resources for your tutorials

finding out more information about university and careers

How should I use the VLE?

The VLE is a professional academic environment in which pupils are able to message their PhD Tutor. Here are a few things to consider:

Ensure you keep a professional tone in the messages you send to your tutors.

Ensure you always reply to your tutors in a timely manner.

Thank your tutor for the effort they are putting in to give you your feedback etc.

Submit all homework to your tutor on time.

IMPORTANT: Final assignment

- When you submit your final assignment, please remember that you need to do so through the **'My Activities'** tab and not as an attachment to a message.

Notes

Notes

UNI PATHWAYS

UNI PATHWAYS

thebrilliantclub.org